PERGOLAST By GLASS GROUP | NEW YORK

HAVEN COLLECTION

Haven

LOUVERED ROOF

Sun, shade or shelter. Tilt the roof to choose.

A motorized aluminum louvered roof. The blades rotate to let in light and air, then close tight against rain, which drains away inside the posts.

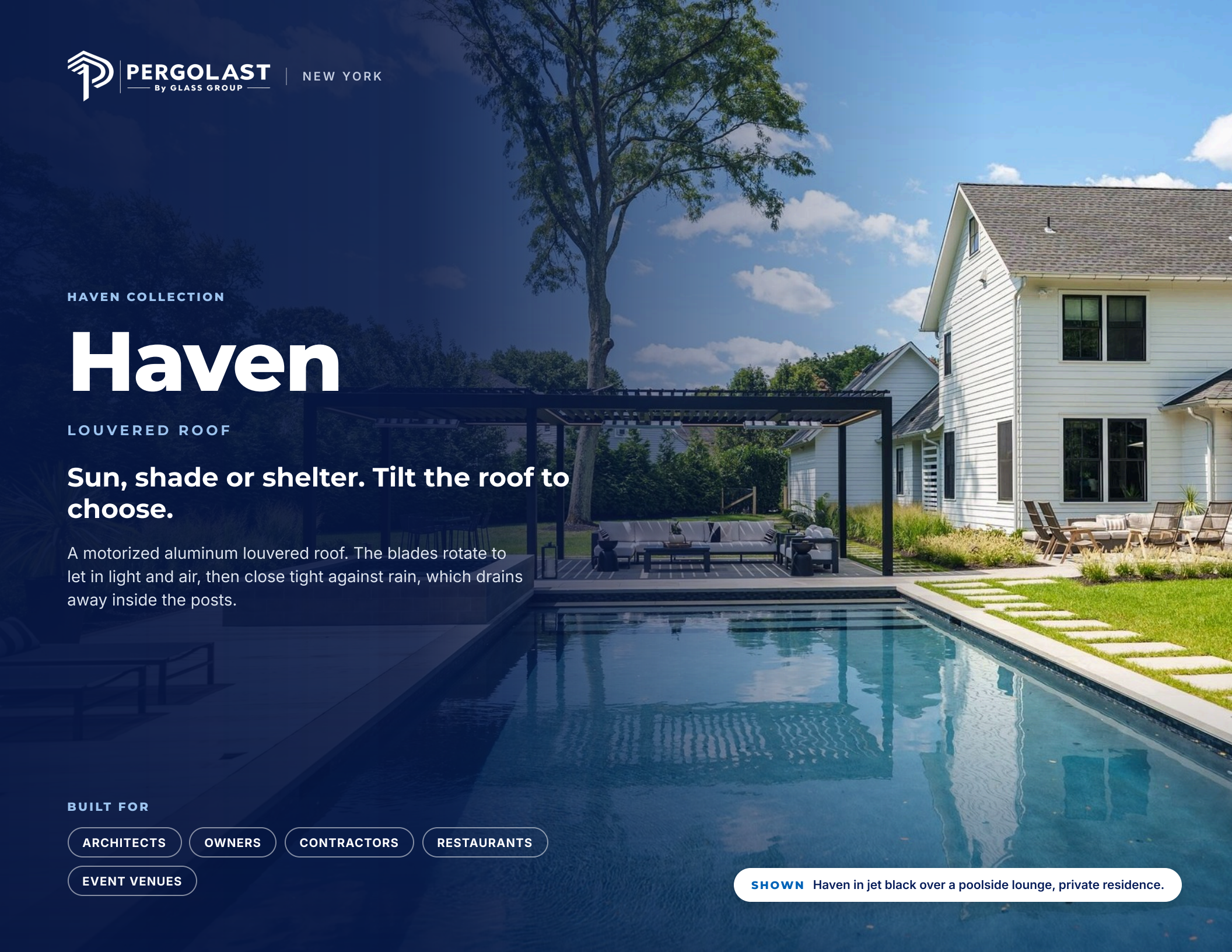

BUILT FOR

ARCHITECTS · OWNERS · CONTRACTORS · RESTAURANTS · EVENT VENUES

SHOWN Haven in jet black over a poolside lounge, private residence.



Fogo de Chão · National Harbor, MD · Haven over the restaurant terrace

One roof that reads the weather.

Haven turns a patio, terrace or rooftop into a room you can use from spring to late fall, and longer with glass and heaters.

01

Closed

Sealed against rain. Water runs to the hidden gutter and down the posts.

02

Tilted

Angle the blades to block low sun and keep the air moving.

03

Open

Blades rotate up to 110° for full daylight and breeze.

ONE SYSTEM, FIVE WAYS TO USE IT

Architects	Custom-sized to your grid, any RAL, concealed drainage, engineered per jurisdiction.
Owners	An outdoor room for dining and lounging, with LED for the evenings.
Contractors	One supplier for roof, screens and glass, with drawings and engineering.
Restaurants	Seat the terrace in sun or rain. Fogo de Chão and Char Steakhouse dine under Haven.
Event venues	Covered space for ceremonies and receptions, with lighting and heaters built in.

Engineered aluminum. Concealed drainage.

Rain runs from the louvers into the built-in gutter and leaves through the posts, so nothing drips on the terrace.

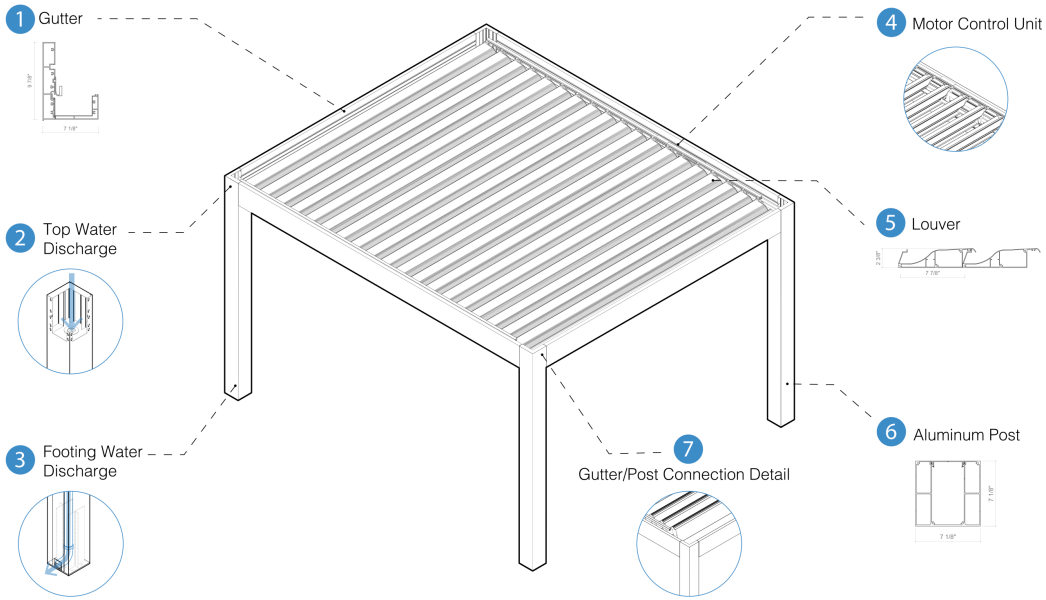

AT A GLANCE

7⅛"	**7⅞"**	**0–110°**	**Hidden**
Aluminum post	Louver blade	Louver rotation	Drainage in posts

SPECIFICATIONS

SYSTEM	Fixed-frame, tilting bioclimatic louver roof
COLUMN	Aluminum, 7⅛" × 7⅛", 3 mm wall
GUTTER	Built into side profiles, 7⅛" × 9⅞"
DRAINAGE	Concealed: into the post, out at the footing
LOUVERS	7⅞" blades, rotate 0–110°, motorized
OPERATION	Motor in the frame, remote; manual option
OPTIONS	Dimmable LED, sensors, heaters
SIZE	Custom to your space, single or multi-bay
PAIRS WITH	**Haven Shade, Haven Rise, Haven Glide**

FRAME FINISHES

9016 · 9006 · 9005 · 7021 · 8017 · 9001

7006 · 7016 · 7040 · Maple · Golden pine · Mahogany

Any RAL on request

Spans, wind and snow loads are engineered per project under local code, with PE review for the jurisdiction. Sizes and options confirmed at quote.

The real Haven drawing.

Front elevation and plan, with the tilting louvers, straight from our CAD library.

GET THIS DRAWING

Download the DWG (AutoCAD)

pergolast.com/products/haven-louvered-pergola

Scan, or click. Open “Documents” on the page.

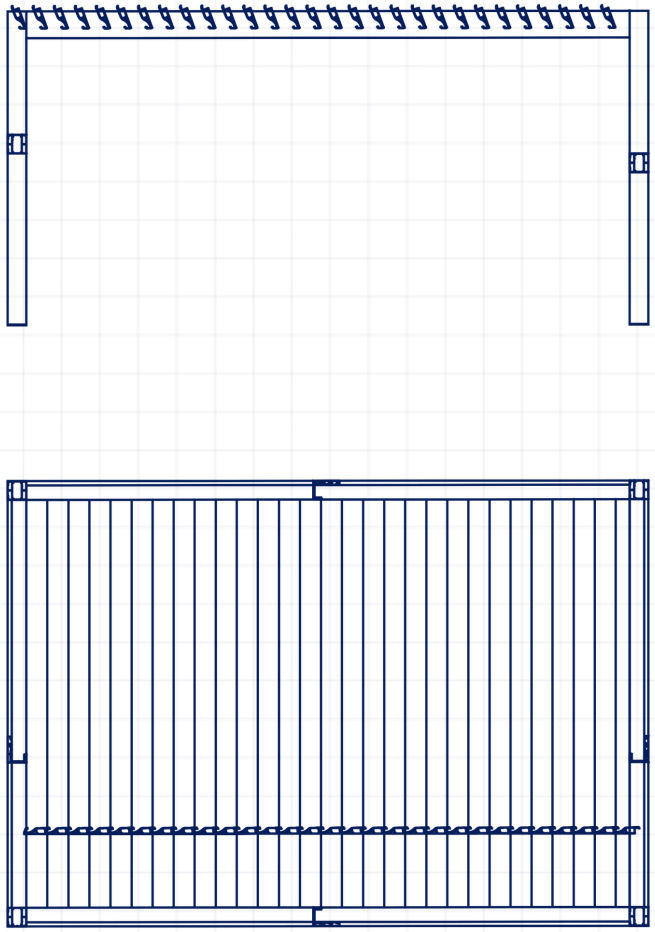

PERGOLAST	PRODUCT	DRAWING	DWG FILE	DOWNLOAD
	Haven	CAD elevation + plan	pergolast-haven-cad.dwg	pergolast.com/products/haven-louvered-pergola

Restaurants, rooftops and homes across the region.



Fogo de Chão

Restaurant · National Harbor, MD



Char Steakhouse

Restaurant · Scotch Plains, NJ · with Haven Rise



Long Island

Private residence · NY · with Haven Shade

More Haven projects: Jersey Shore, Deal, Long Branch and Hanover, NJ.

WHY PERGOLAST

Designed & engineered in New York

Pergolast is the outdoor-structure brand of Glass Group, a New York glazing contractor. Every structure is engineered for its site and jurisdiction.

Made to measure

Custom-fabricated to your dimensions, in 12 standard finishes or any RAL colour.

One team, one system

Roof, screens, glass, LED and heaters from one source, designed to work together.

Installed and backed

Professional installation, and the Pergolast Haven Collection limited warranty.

HOSPITALITY CLIENTS INCLUDE

Fogo de Chão · Char Steakhouse · Rikasa · Don Cheech · The Glass Ceiling · Water Gap Wellness Inn, plus private homes.

YOUR NEXT STEP

Let's design your Haven.

Get your Haven quote

Scan, send your size and finish, and we'll price it.

pergolast.com/pages/contact

ARCHITECTS
Request the spec sheet, CAD details and finish samples

CONTRACTORS
Send your drawings for pricing and shop drawings

OWNERS
Book a site visit and a design consultation

RESTAURANTS
Ask about seasonal enclosures that add seats

EVENT VENUES
Plan covered space for ceremonies and receptions

(646) 495-9911

sales@pergolast.com · pergolast.com
Pergolast
199 Water St, New York, NY 10038