PERGOLAST
By GLASS GROUP

HAVEN COLLECTION · BIOCLIMATIC LOUVERED PERGOLA

Haven

Installation Guide

Step-by-step assembly, site preparation, wiring and care for homeowners and installing contractors.

HOMEOWNERS | CONTRACTORS | INSTALLERS



VERSION 1.0 · NOVEMBER 2026 · METRIC WITH IMPERIAL EQUIVALENTS

BEFORE YOU BEGIN

About this guide

Thank you for choosing a **Haven** bioclimatic louvered pergola by Pergolast. This guide takes you through the full installation, from preparing the site to the first time you open the roof.

It is written for two readers: **homeowners** who want to understand the process or assemble with help, and **contractors and installers** who are installing the system for a client.

Read the whole guide before you start. Every step lists the parts it uses, numbered the same way as the drawings. Keep this guide with the system for future owners.

PROFESSIONAL INSTALLATION RECOMMENDED

Haven is a motorized, engineered structure. We recommend installation by Pergolast or an experienced contractor. Footings and anchoring must follow the project drawings and local building code, and all line-voltage wiring must be done by a **licensed electrician**.

WARRANTY

Systems installed by a contractor keep the Pergolast Product Warranty only when installed to this guide and the shop drawings. See page 26 for the conditions and how to register the installation.

CONTENTS

01	Safety	3
02	Tools and package check	4
03	Site preparation and anchoring	5
04	System overview and parts	6
05	Assembly steps 01–17	7–23
06	Wiring and first start-up	24
07	Final inspection and handover	25
08	Warranty and registration	26
09	Care, maintenance and troubleshooting	27–28

NEED HELP?

Installation support, parts and warranty

service@pergolainstaller.com

Have your Pergolast order or invoice number ready.

SECTION 01

Safety

Read these warnings before you open the boxes. Failure to follow them can cause injury or damage the system.

People and lifting

- At least **two people** are needed. Gutters, beams and posts are long and heavy: lift them together and never alone.
- Use two stable step ladders or scaffolding of the right height. Never stand on the top step or on the louvers.
- Wear safety glasses, work gloves and safety shoes. Use hearing protection when drilling concrete.
- Keep children and pets away from the work area until the job is finished.

Structure

- Do not install in wind, rain or ice. Do not leave a partly assembled frame unbraced overnight.
- Anchor every post before you install the louvers. An unanchored frame can tip.
- Do not hang swings, hammocks or heavy objects from the frame or louvers.
- Do not modify, cut or drill structural parts unless shown in this guide or the shop drawings.

Electrical

- Line-voltage (120 V) connections must be made by a **licensed electrician** to the NEC and local code.
- The supply circuit must be GFCI-protected and switched off at the panel while you work.
- Never pinch or cut cables when fixing covers and profiles. Route them only through the channels shown.
- Keep hands clear of the drive arm and louvers when testing the motor.

BEFORE YOU DIG OR DRILL

Call **811** at least a few working days before digging footings so buried utilities can be marked. Check slabs for embedded pipes, cables and post-tension tendons before drilling.

SECTION 02

Tools and package check

Haven uses **metric** fasteners. Have metric hex keys and sockets on site.

TOOLS YOU NEED

TASK	TOOL
Layout	Tape measure, chalk line, marker, 6 ft level, laser level
Anchoring	Hammer drill, masonry bits sized for your anchors, torque wrench
Hex socket bolts	Metric hex (Allen) keys 4, 5 and 6 mm
Hex bolts and nuts	10 mm and 13 mm wrenches or sockets
Screws	Cordless drill/driver with clutch, Phillips PH2 and PH3 bits
Sealing	Caulk gun, exterior-grade neutral-cure silicone
Access	Two step ladders or scaffold, two padded sawhorses or trestles
Other	Rubber mallet, utility knife, cable ties, stainless shims

> TIP
>
> Set the drill clutch low. Stainless screws in aluminum strip easily if over-driven. Tighten by hand to finish.

CHECK THE DELIVERY

Before you start, unpack every box on a clean, padded surface and check the parts against the packing list and the part numbers in this guide (01–45).

- [ ] Check every profile for dents, scratches and bent ends.
- [ ] Count fastener bags and match them to the steps that use them.
- [ ] Keep the protective film on the profiles until the system is assembled.
- [ ] Report missing or damaged parts **within 10 days of delivery**, with photos, to service@pergolainstaller.com. Do not install damaged parts.

MAIN COMPONENTS

Structure	Posts (01), base flanges (02), post plates and caps (04, 05), gutter and wall profiles (07, 08)
Roof	Louvers (11) with gaskets and end caps (12, 13), pivot shafts and bearings (15, 16), carrier profile (18)
Drive	Sigma tilt bar (19), drive arm (24), linear actuator motor (30), motor bracket (35), connectors (37, 42)
Electrical	Motor cable, LED profile and strip (44, 45), dimmer and transformer

SECTION 03

Site preparation and anchoring

A level, square and solid base is the most important part of a good installation.

Permits and design

- Check with your local building department. Many towns require a permit for a pergola, its footings and its wiring.
- Footing size, anchor type and embedment must follow the **project drawings** or a design reviewed by a licensed engineer for your wind and snow loads.
- Confirm the post layout and overall size on the shop drawing before you mark the ground.

Level and square

- The surface under the base flanges should be level within **3 mm (1/8 in)** across the full span.
- Mark post centers, then check both diagonals. They must match within **3 mm (1/8 in)**.
- Use stainless steel shims only, up to 3 mm (1/8 in) per flange. Do not use wood shims.
- Keep at least **150 mm (6 in)** clear of walls, railings and eaves on open sides.

Drainage and power

- Rainwater runs from the louvers to the gutters and down inside the posts. Decide which posts drain and where the water will go.
- Plan a splash block, drain or downspout connection at each draining post.
- Bring a GFCI-protected supply to the motor post (the post with the cable entry), or install a weatherproof outlet within 1.5 m (5 ft) of it.

MOUNTING SURFACES

SURFACE	METHOD	NOTES
Concrete slab	Anchor flanges directly with stainless expansion or screw anchors	Slab thickness, edge distance and anchor type per project drawings
Pavers	New concrete footings under each post, flush with or below the pavers	Lift and reset pavers around each footing
Wood or composite deck	Through-bolt to added blocking and framing below the deck	Deck framing must be checked for the added load
Soil or lawn	Cast-in-place concrete footings below frost depth	Frost depth and footing size per local code

> **ANCHORING ORDER**
>
> Dry-fit all base flanges first, check diagonals, then drill and anchor. Tighten anchors gradually, alternating between opposite corners, and recheck the diagonals after anchoring.

SECTION 04

System overview

How the parts of a Haven system go together.



Assemble the system in this order. Each stage has its own steps in Section 05, and parts are numbered the same way throughout.

Steps 01–02	Posts, base flanges, post plates and caps
Step 03	Gutter and wall profiles, the perimeter frame
Steps 04–06	Louvers, end caps, pivot shafts and carrier profile
Steps 07–08	Sigma tilt drive bar
Steps 09–14	Drive arm, motor and motor bracket
Step 15	LED lighting
Step 16	Rainwater drainage through the posts
Step 17	Motor cable and electrical layout

READING THE STEPS

Numbers in brackets, such as (07), refer to the circled part numbers on the drawings. Fastener sizes are metric; approximate imperial sizes are shown for reference only. Always use the fasteners supplied.

Post and base flange

01

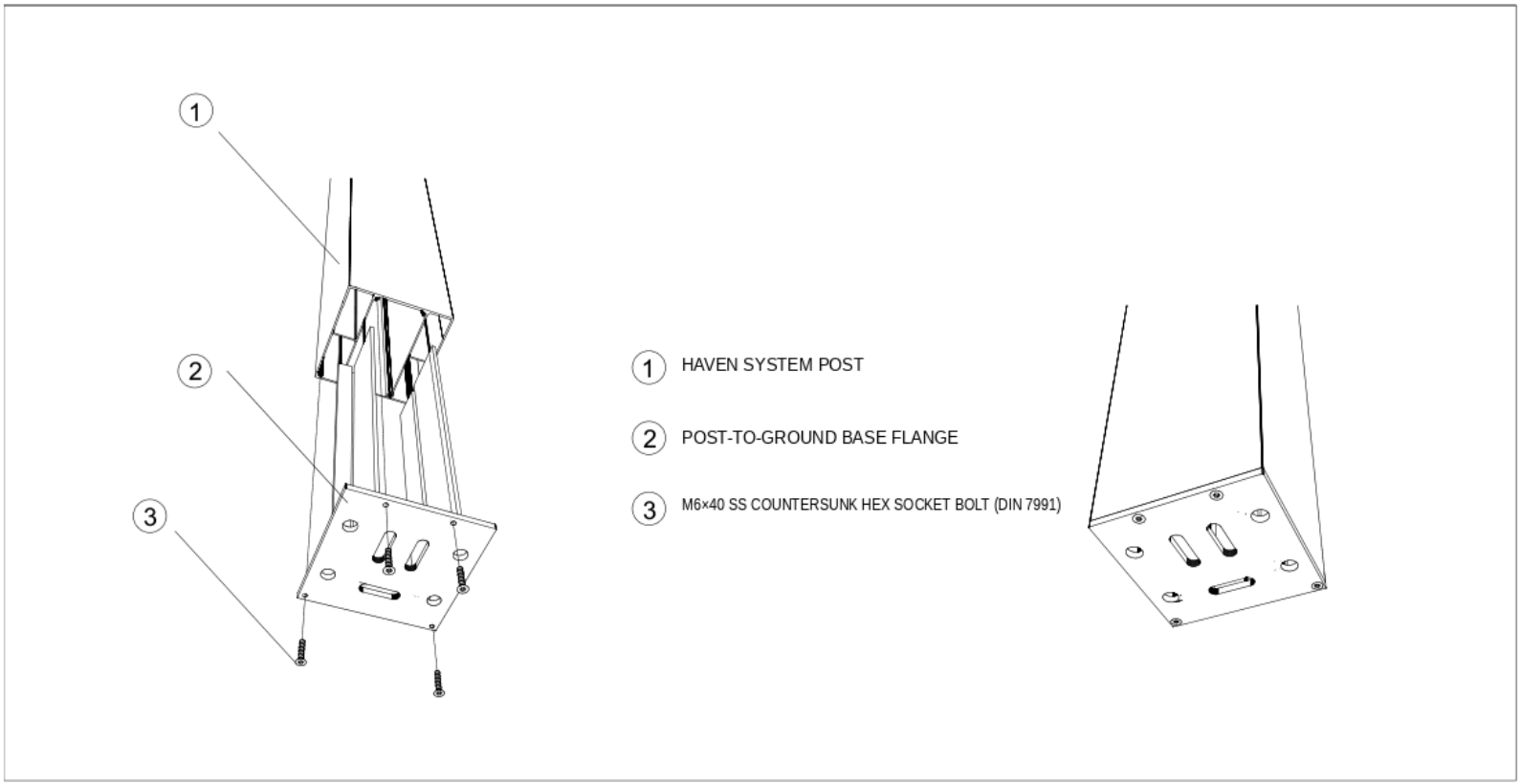

PARTS

01	Haven system post
02	Post-to-ground base flange
03	M6 × 40 mm stainless countersunk hex socket bolt, DIN 7991 (≈ ¼ × 1-9/16 in)

STEPS

01 Place the post (01) on the base flange (02) so the bolt holes line up as shown in the drawing.

02 Fix the flange to the post with the M6 × 40 stainless countersunk hex socket bolts (03). Use a 4 mm hex key.

03 Set the post and flange in its marked position and anchor the flange as described in Section 03. Check the post is plumb in both directions.

> **INSTALLER TIP**
>
> Shim under the flange, never under the post. Recheck the frame diagonals after every post is anchored.

Post inner plate and cap

02

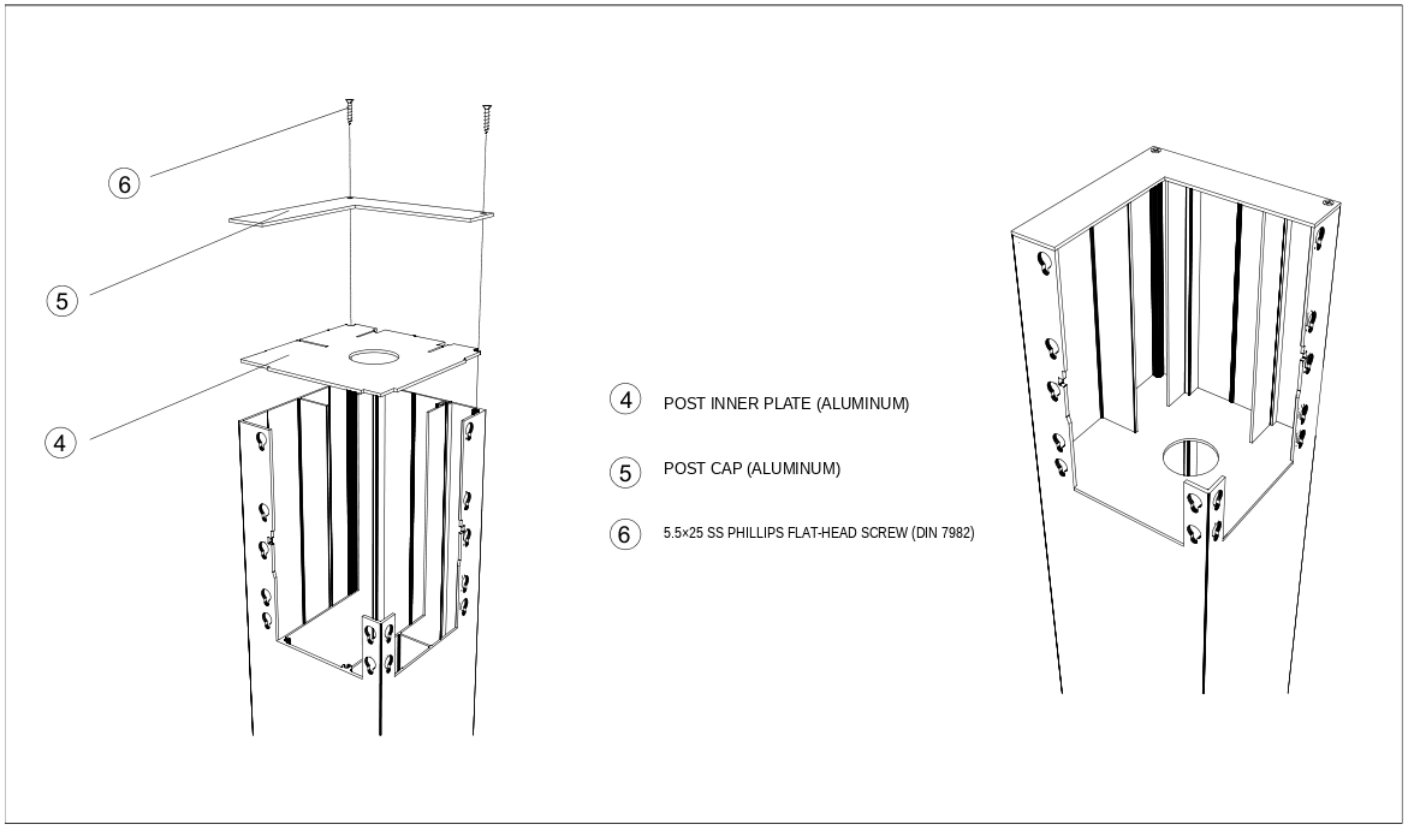

PARTS

04	Post inner plate (aluminum)
05	Post cap (aluminum)
06	5.5 × 25 mm stainless Phillips flat-head screw, DIN 7982 (≈ #12 × 1 in)

STEPS

01 Fit the aluminum inner plate (04) into its slot in the post section, as shown in the drawing.

02 Place the aluminum post cap (05) on top of the inner plate.

03 Fix the cap with the 5.5 × 25 stainless screws (06).

INSTALLER TIP

Keep the center hole in the inner plate clear. It is part of the water path from the gutter into the post.

Gutter and wall profile connection

03

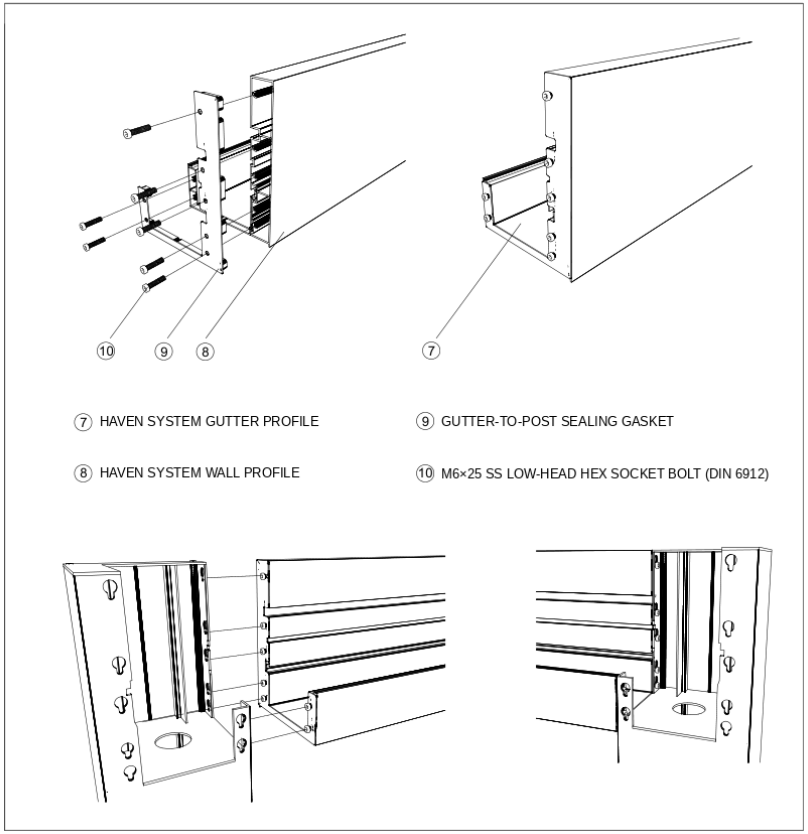

PARTS

07	Haven system gutter profile
08	Haven system wall profile
09	Gutter-to-post sealing gasket
10	M6 × 25 mm stainless low-head hex socket bolt, DIN 6912 (≈ ¼ × 1 in)

STEPS

01 Place the gutter profile (07) and the wall profile (08) in line with the joint shown in the drawing.

02 Fit the gutter-to-post sealing gasket (09) on the joining face.

03 Join the profiles with the M6 × 25 low-head hex socket bolts (10). Use a 5 mm hex key.

INSTALLER TIP

Lift gutters onto the posts with two people. Check the gasket sits flat and is not pinched before you tighten. A pinched gasket will leak.

Louver profile and end cap

04

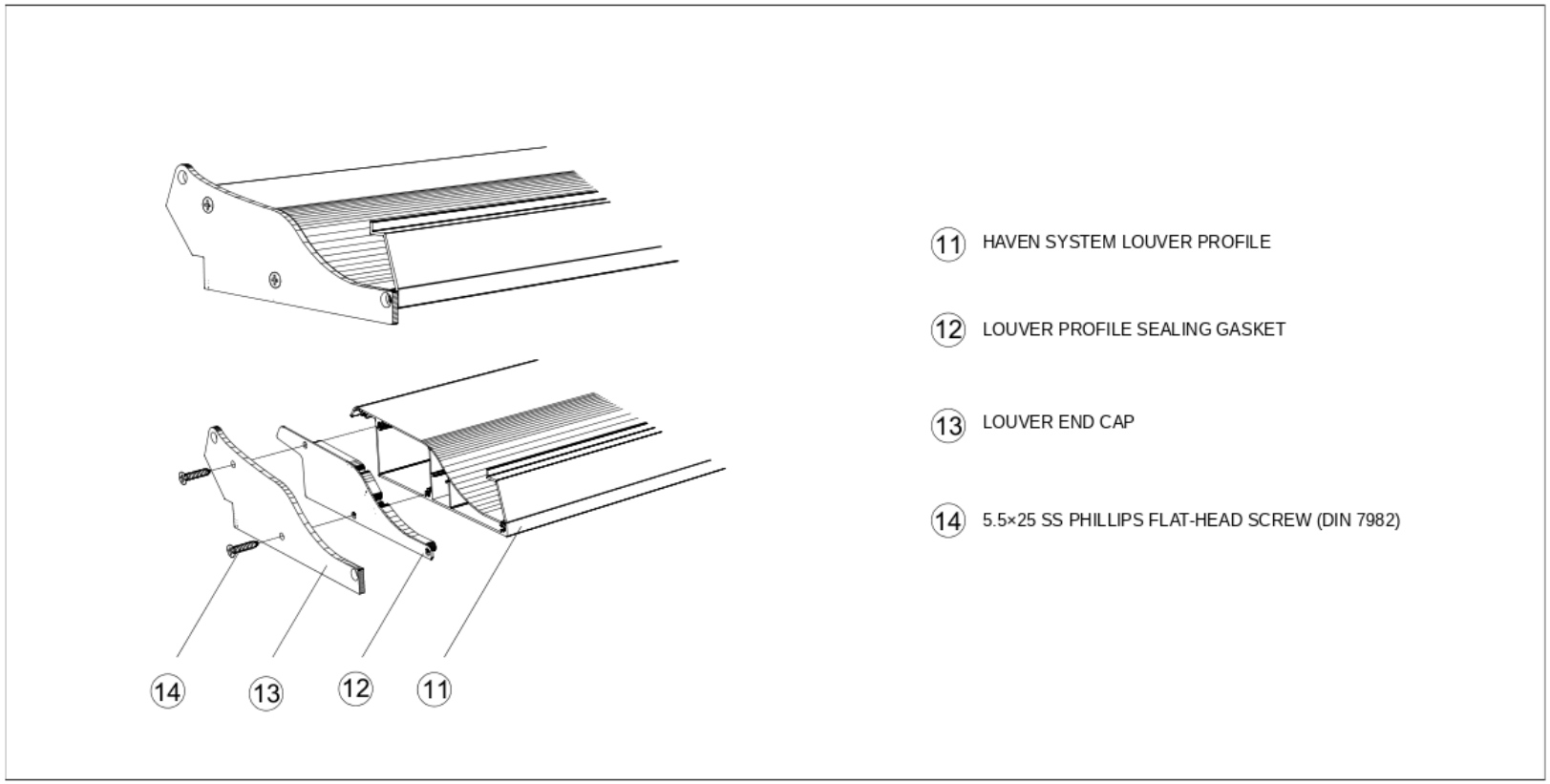

PARTS

11	Haven system louver profile
12	Louver profile sealing gasket
13	Louver end cap
14	5.5 × 25 mm stainless Phillips flat-head screw, DIN 7982 (≈ #12 × 1 in)

STEPS

01 Press the louver sealing gasket (12) into its channel in the louver profile (11).

02 Fit the louver end cap (13) onto the end of the profile.

03 Fix the end cap with the 5.5 × 25 stainless screws (14).

INSTALLER TIP

Work on padded sawhorses. Prepare all louvers the same way before lifting them into the frame.

Louver pivot shaft

05

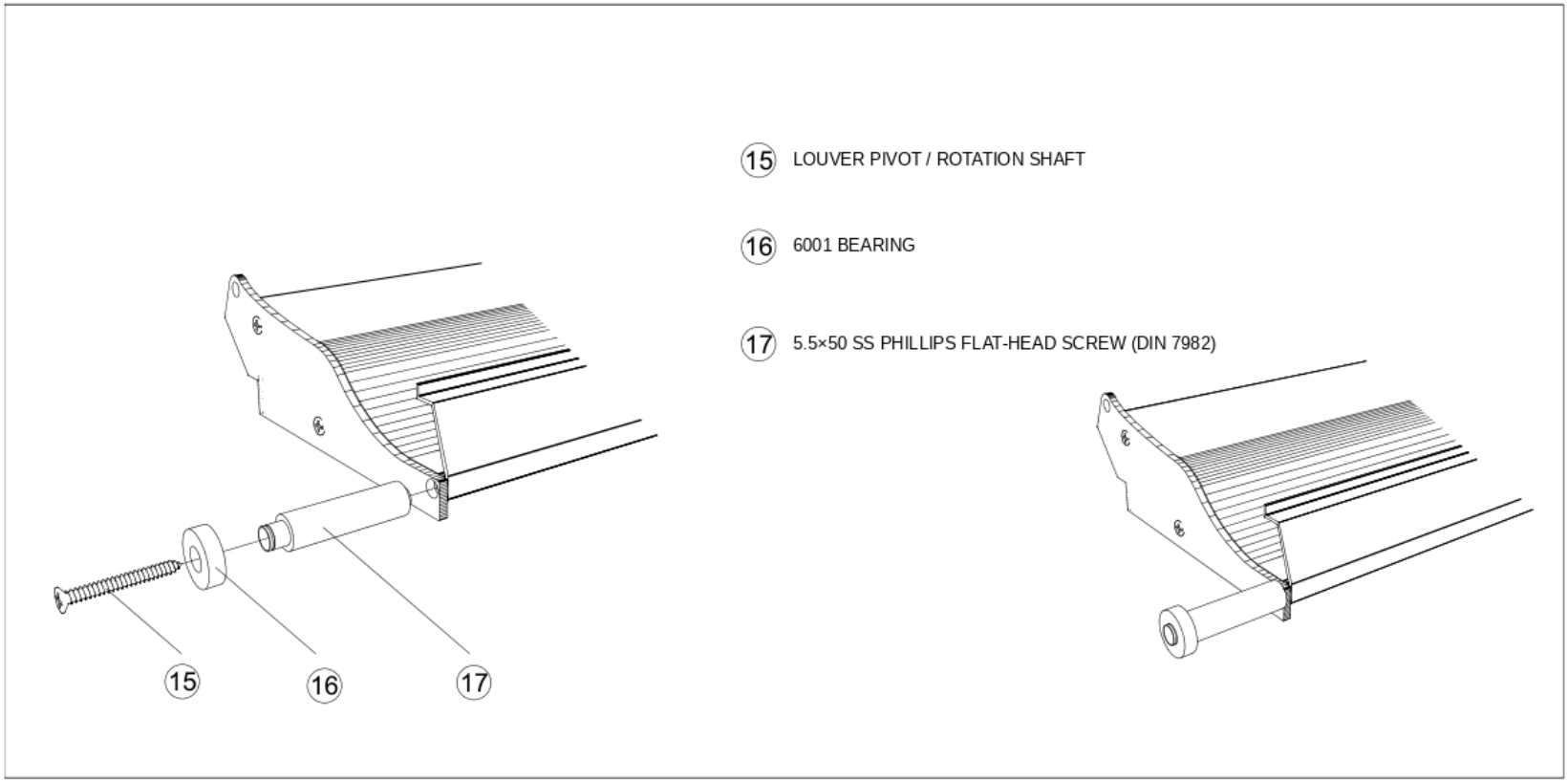

PARTS

15	Louver pivot / rotation shaft
16	6001 bearing
17	5.5 × 50 mm stainless Phillips flat-head screw, DIN 7982 (≈ #12 × 2 in)

STEPS

01 Insert the louver pivot shaft (15) into the end of the louver.

02 Seat the 6001 bearing (16) on the bearing section of the shaft.

03 Complete the connection with the 5.5 × 50 stainless screw (17).

INSTALLER TIP

Turn each louver by hand after fitting the shafts. It should rotate freely without rubbing.

Louver carrier profile

06

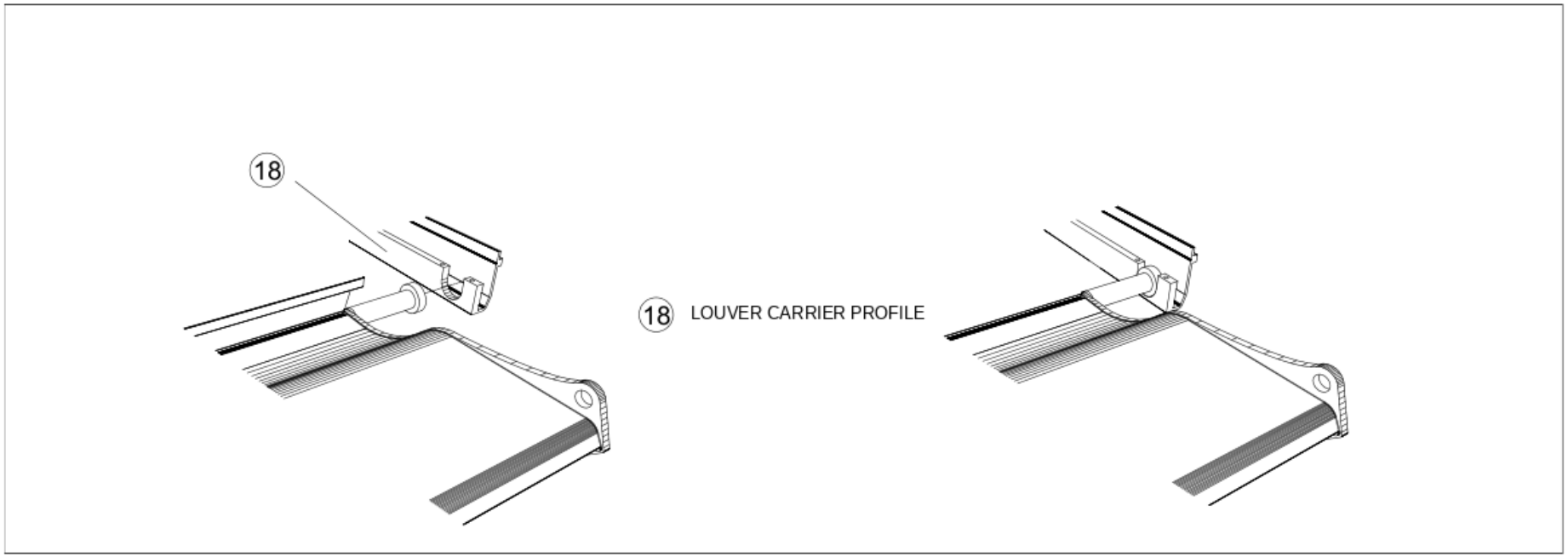

PARTS

18	Louver carrier profile

STEPS

01 Place the louver carrier profile (18) along the connection line shown in the drawing.

02 Join the connecting end of the profile to the louver carrier part at the position shown.

INSTALLER TIP

Set the louvers into the carrier one by one, starting from the motor end. Check the spacing is even before going on.

Sigma profile and tilt drive

07

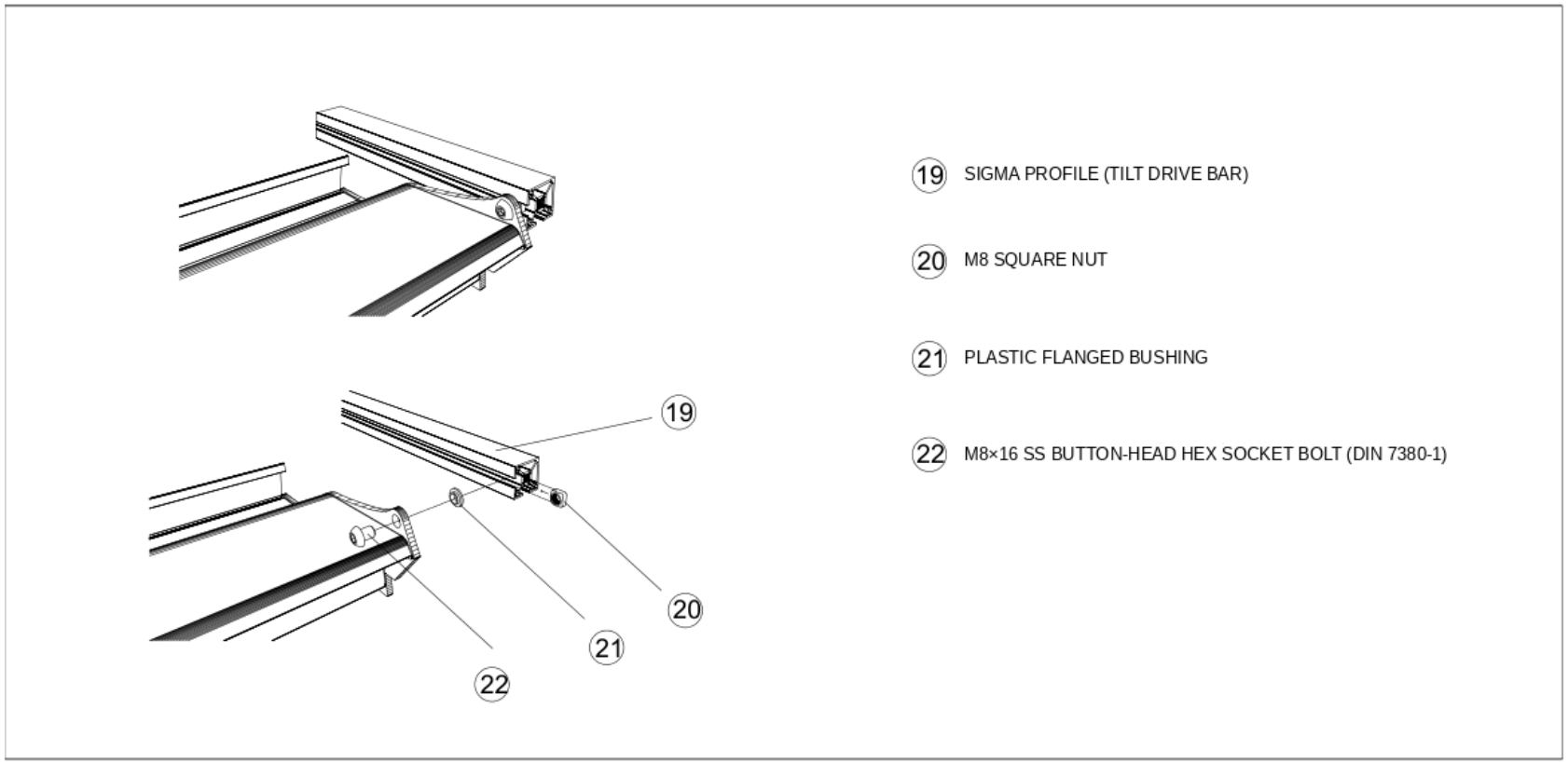

PARTS

19	Sigma profile (tilt drive bar)
20	M8 square nut
21	Plastic flanged bushing
22	M8 × 16 mm stainless button-head hex socket bolt, DIN 7380-1 (≈ 5/16 × 5/8 in)

STEPS

01 Place the sigma drive profile (19) in its position as shown in the drawing.

02 Slide the M8 square nut (20) into the profile channel and fit the plastic flanged bushing (21) at the connection point.

03 Complete the connection with the M8 × 16 button-head bolt (22). Use a 5 mm hex key.

INSTALLER TIP

Every louver links to the sigma bar. The louvers must be free to pivot on the bushing, so do not over-tighten.

Fixing the drive profile

08

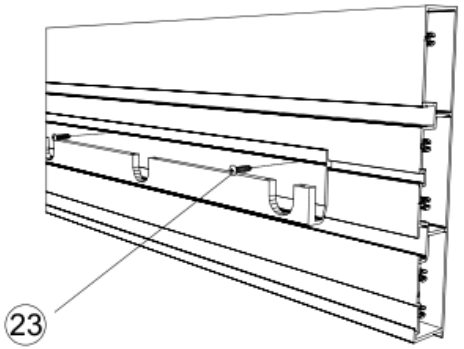

23 4.8×19 SS PHILLIPS PAN-HEAD SHEET-METAL SCREW (DIN 7981)

PARTS

- (23) 4.8 × 19 mm stainless Phillips pan-head sheet-metal screw, DIN 7981 (≈ #10 × ¾ in)

STEPS

01 Place the fixing section of the drive profile at the connection point shown in the drawing.

02 Fix it with the 4.8 × 19 stainless sheet-metal screw (23) through the marked hole.

Motor drive arm sub-assembly

09

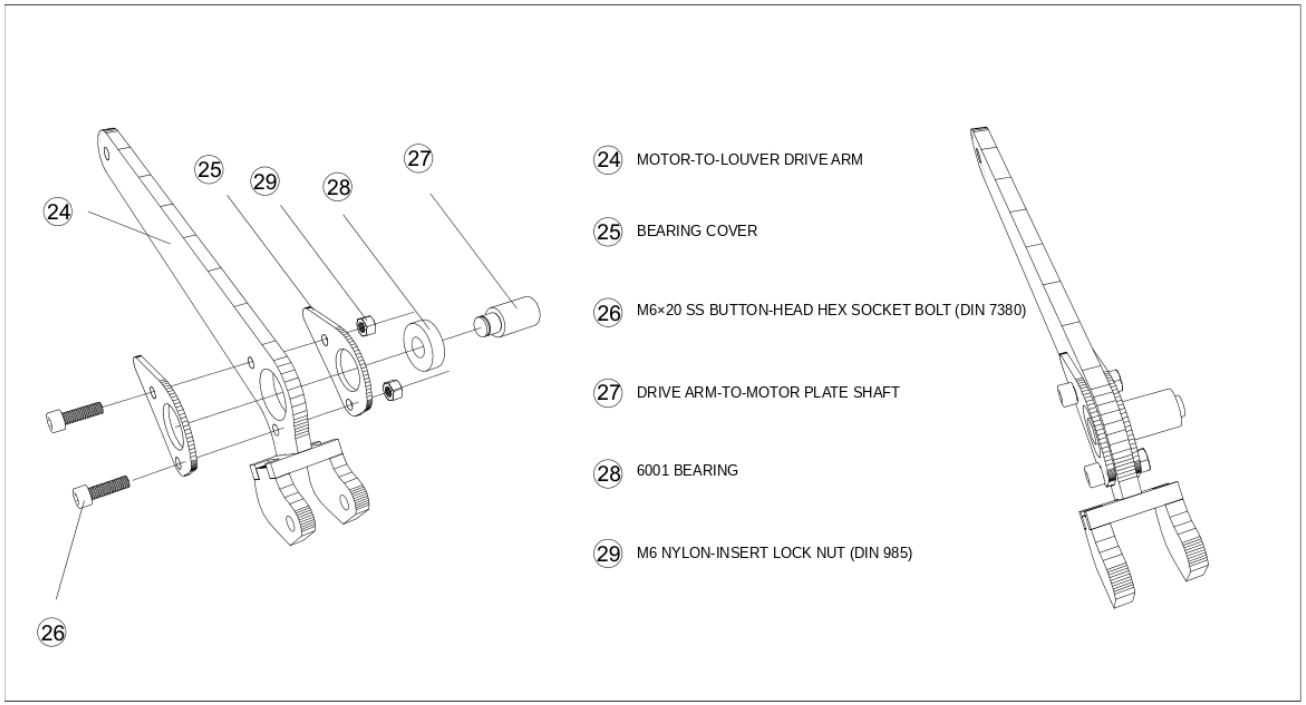

PARTS

24	Motor-to-louver drive arm
25	Bearing cover
26	M6 × 20 mm stainless button-head hex socket bolt, DIN 7380 (≈ ¼ × ¾ in)
27	Drive arm-to-motor plate shaft
28	6001 bearing
29	M6 nylon-insert lock nut, DIN 985

STEPS

01 Assemble the motor drive arm (24), the connecting shaft (27) and the 6001 bearing (28) in the order shown in the exploded view.

02 Fit the bearing cover (25) in place.

03 Complete the connection with the M6 × 20 bolts (26) and M6 nylon-insert lock nuts (29). Use a 4 mm hex key and a 10 mm wrench.

INSTALLER TIP

Build this sub-assembly on the bench. Nylon-insert lock nuts are single-use: fit a new nut if one is removed.

Motor and drive arm connection

10

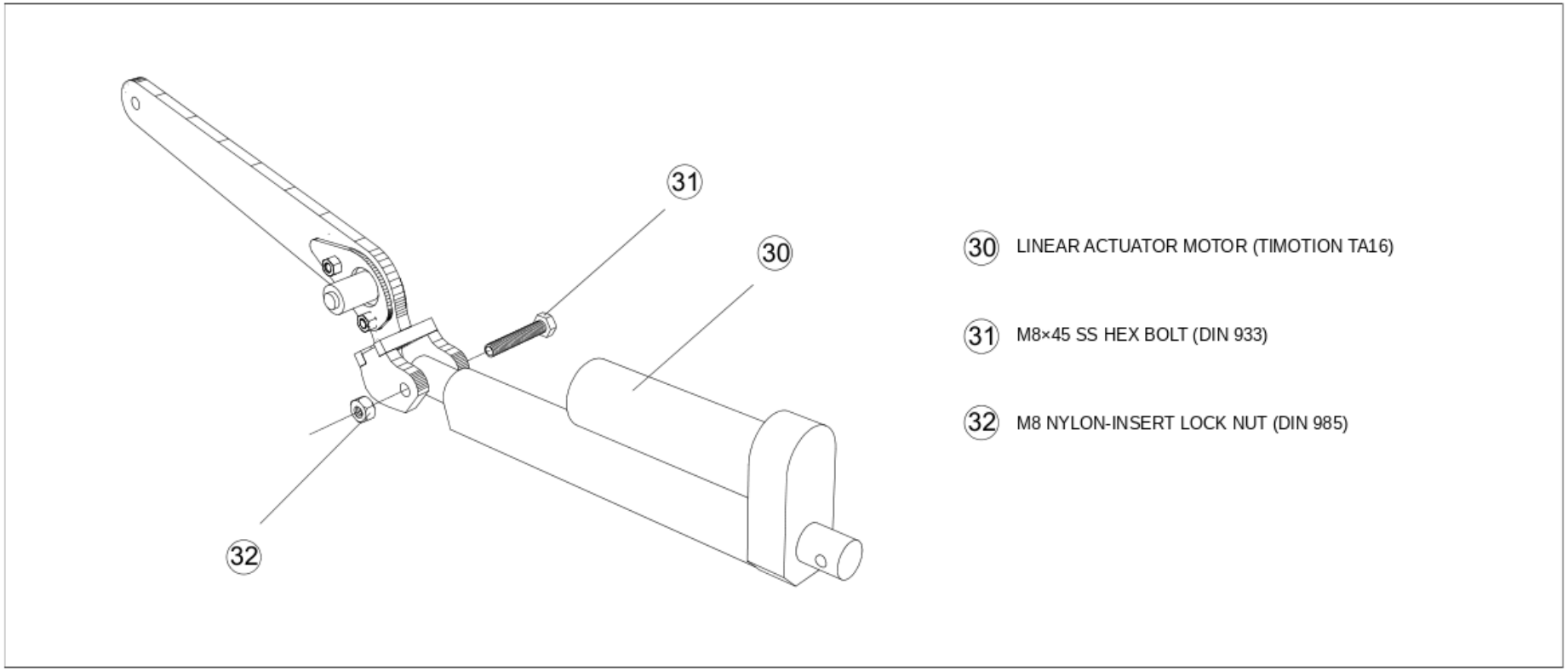

PARTS

30	Linear actuator motor (Timotion TA16)
31	M8 × 45 mm stainless hex bolt, DIN 933 (≈ 5/16 × 1-3/4 in)
32	M8 nylon-insert lock nut, DIN 985

STEPS

01 Place the linear actuator motor (30) at the drive arm connection point.

02 Pass the M8 × 45 bolt (31) through the connection holes.

03 Secure the motor with the M8 nylon-insert lock nut (32). Use 13 mm wrenches.

INSTALLER TIP

The bolt is a pivot. Tighten the nut until it is snug with no play, while the motor eye can still turn on the bolt.

Motor mounting bracket

11

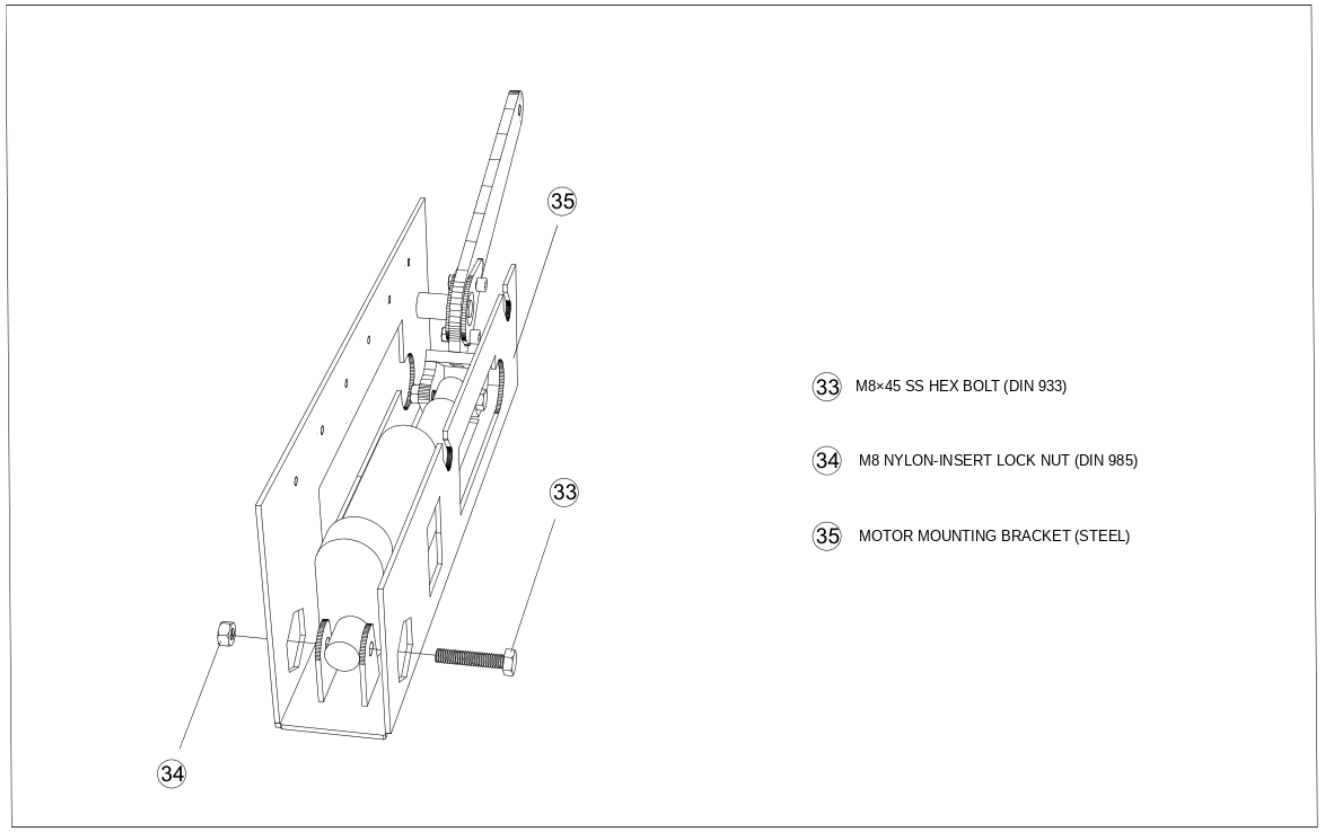

PARTS

- (33) M8 × 45 mm stainless hex bolt, DIN 933 (≈ 5/16 × 1-3/4 in)
- (34) M8 nylon-insert lock nut, DIN 985
- (35) Motor mounting bracket (steel)

STEPS

01 Place the motor mounting bracket (35) in the bracket seat shown in the drawing.

02 Pass the M8 × 45 bolt (33) through the connection holes.

03 Fit the M8 nylon-insert lock nut (34) to complete the bracket connection.

Fixing the motor group to the profile

12

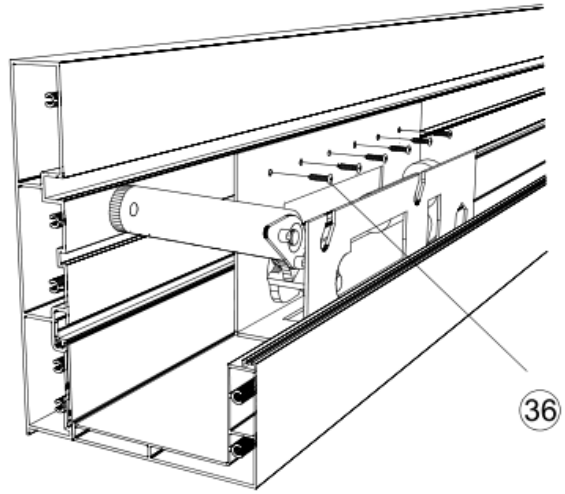

36 4.8×19 SS PHILLIPS PAN-HEAD SHEET-METAL SCREW (DIN 7981)

PARTS

- (36) 4.8 × 19 mm stainless Phillips pan-head sheet-metal screw, DIN 7981 (≈ #10 × ¾ in)

STEPS

01 Place the motor bracket group at the profile connection section shown in the drawing.

02 Fix the motor group to the profile with the 4.8 × 19 stainless sheet-metal screws (36).

INSTALLER TIP

Before closing the profile, check the motor cable has a clear path to the cable channel (see step 17).

Drive arm to sigma profile connection

13

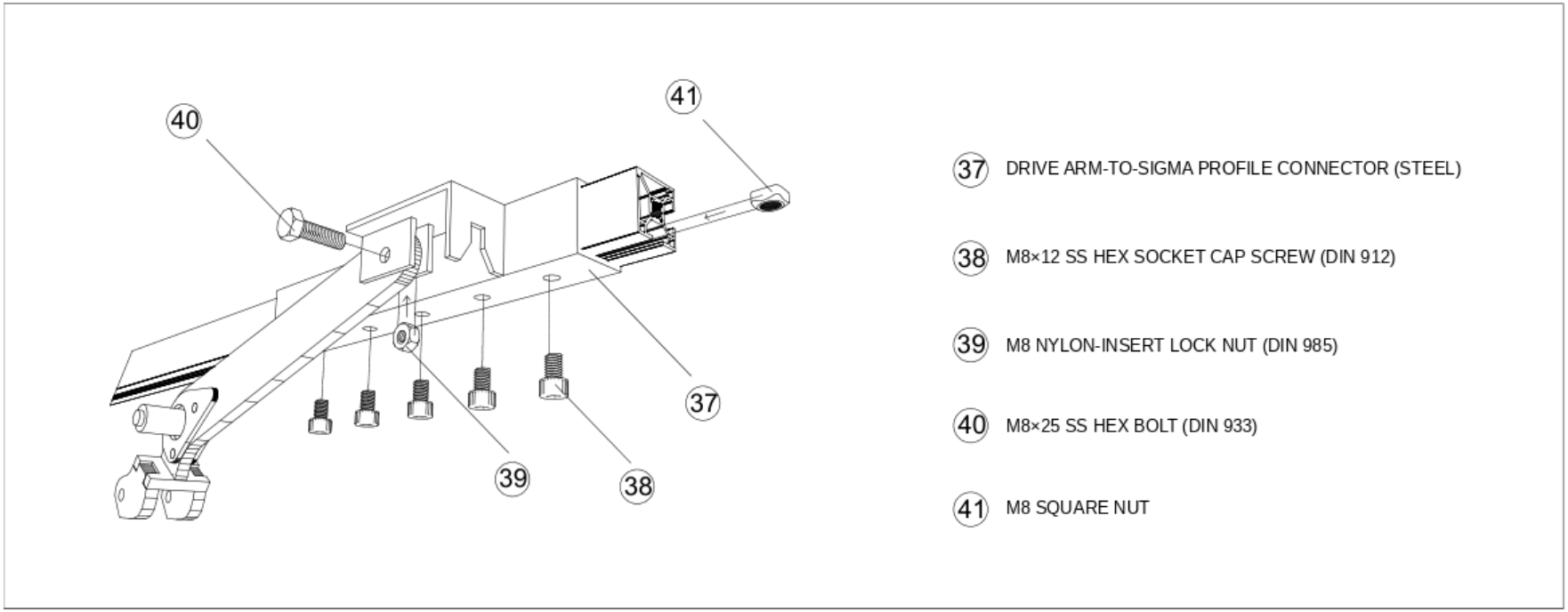

PARTS

37	Drive arm-to-sigma profile connector (steel)
38	M8 × 12 mm stainless hex socket cap screw, DIN 912 (≈ 5/16 × ½ in)
39	M8 nylon-insert lock nut, DIN 985
40	M8 × 25 mm stainless hex bolt, DIN 933 (≈ 5/16 × 1 in)
41	M8 square nut

STEPS

01 Place the drive arm-to-sigma profile connector (37) in the position shown in the drawing.

02 Slide the M8 square nut (41) into the sigma profile channel.

03 Join the connector with fasteners (38), (39) and (40) as shown. Use a 6 mm hex key and 13 mm wrenches.

INSTALLER TIP

This connection transfers the motor force to every louver. Check all three fasteners twice.

Louver to motor bracket connection

14

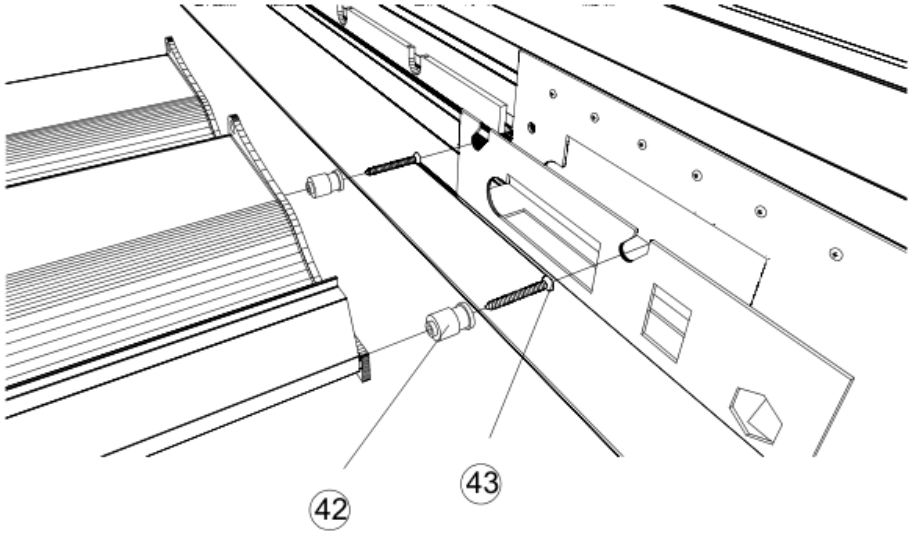

42 LOUVER-TO-MOTOR BRACKET CONNECTOR

43 5.5×38 SS PHILLIPS FLAT-HEAD SCREW (DIN 7982)

PARTS

- 42 Louver-to-motor bracket connector
- 43 5.5 × 38 mm stainless Phillips flat-head screw, DIN 7982 (≈ #12 × 1-1/2 in)

STEPS

01 Place the louver-to-motor connector (42) at the louver end connection shown in the drawing.

02 Fix it with the 5.5 × 38 stainless screw (43).

LED profile and gutter section

15

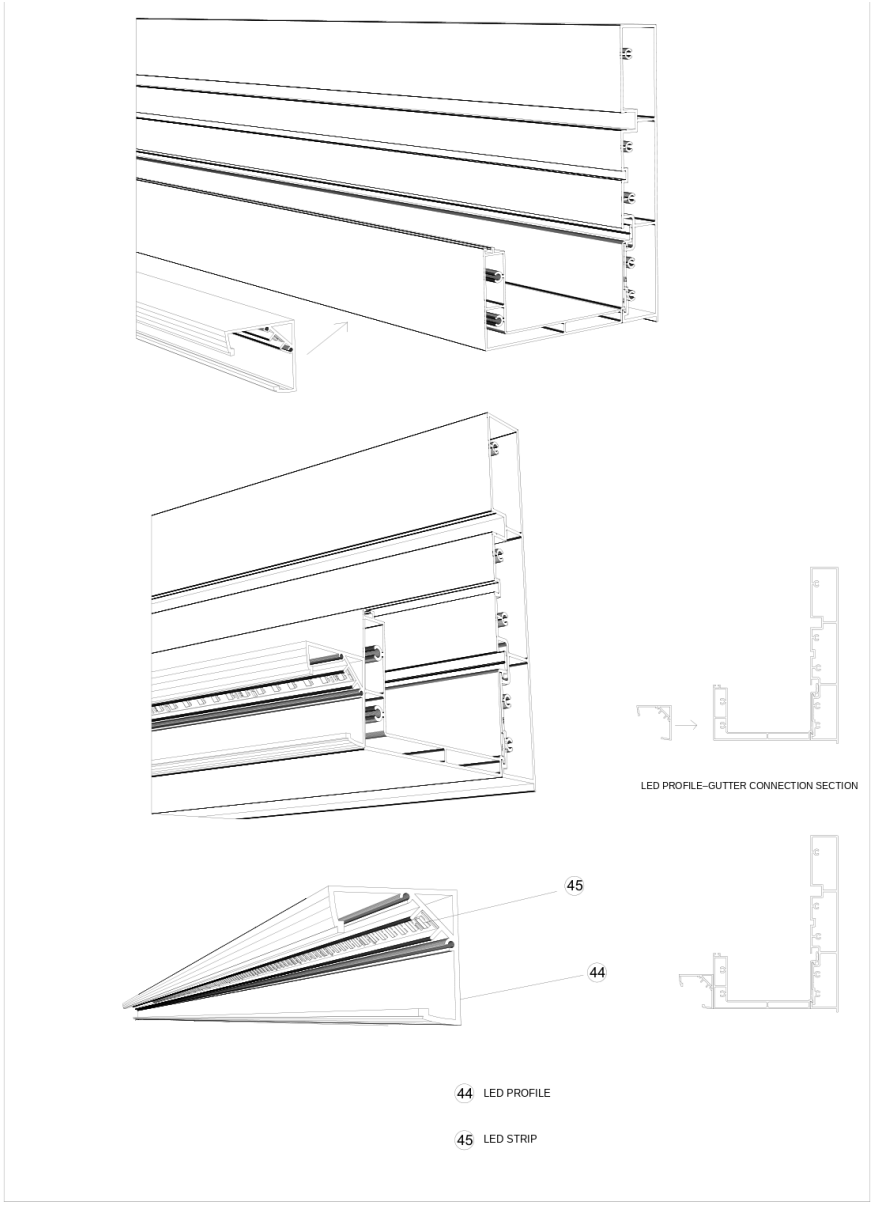

PARTS

- (44) LED profile
- (45) LED strip

STEPS

01 Slide the LED profile (44) into its channel in the gutter profile, as shown in the section drawing.

02 Fit the LED strip (45) inside the LED profile.

03 Route the cable along the profile path shown in the drawing to the motor post.

> **INSTALLER TIP**
> Take care when driving screws near the gutter corners so you do not nick the LED cable. Test the LEDs before closing the profiles.

Rainwater drainage and post section

16

DRAINAGE DETAIL

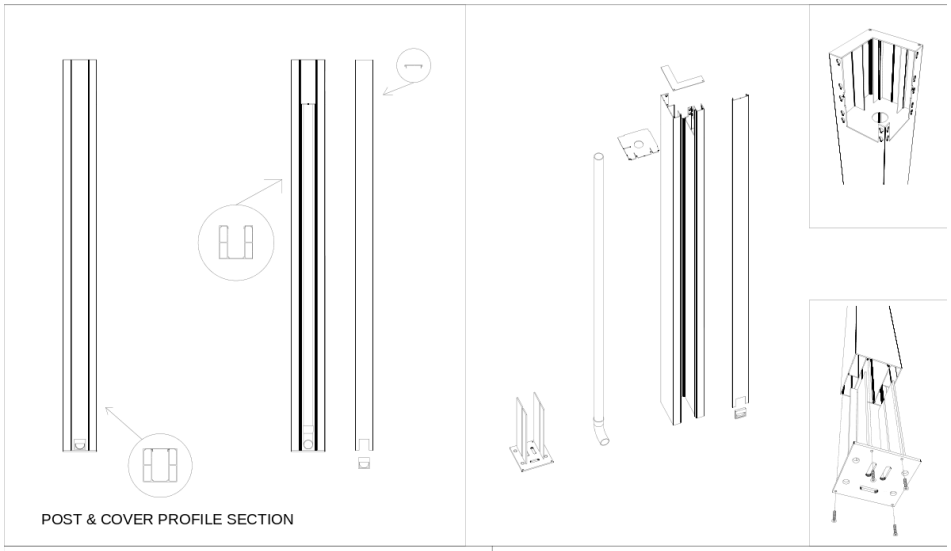

POST & COVER PROFILE SECTION

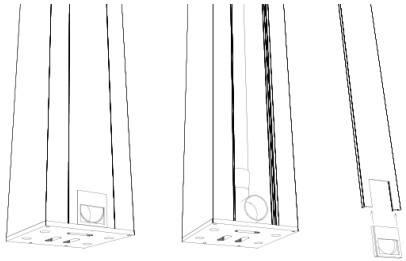

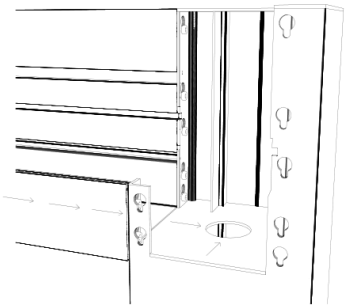

SYSTEM DRAINAGE DIAGRAM

STEPS

01 Prepare the post cover profile and downpipe parts in the order shown in the exploded view.

02 Fit the downpipe channel inside the post profile in the direction shown in the drawing.

03 Connect the gutter outlet to the water path inside the post.

04 Fit the bottom drain outlet at the base of the post, in the position shown.

> **INSTALLER TIP**
>
> Seal the gutter outlet joint with neutral-cure silicone. Pour a bucket of water into each gutter to check the water drains out at the post base before closing the covers.

Motor cable and electrical layout

17

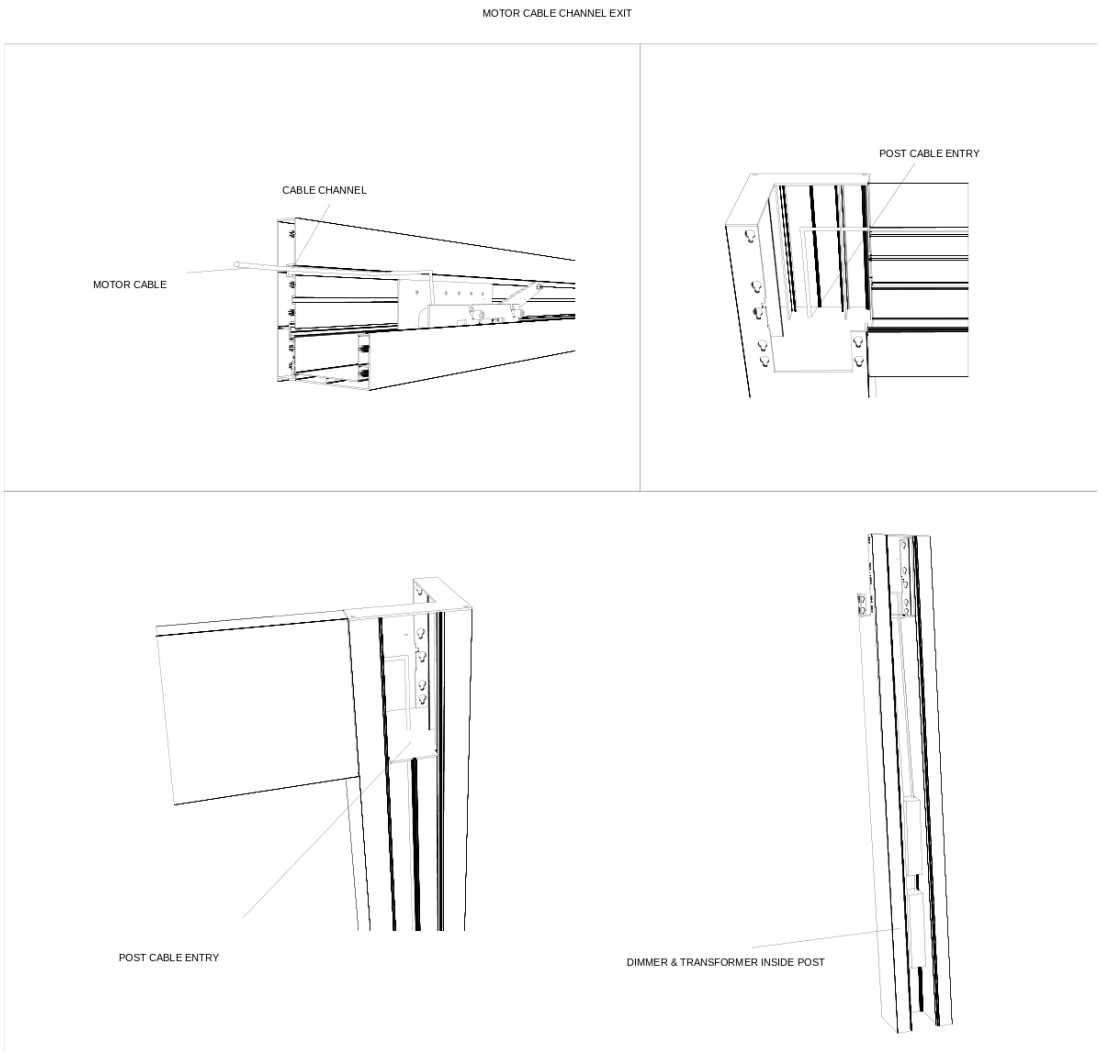

STEPS

01 Route the motor cable along the cable channel shown in the drawing.

02 Pass the cable through the cable entry in the post profile.

03 Place the dimmer and transformer in the space inside the post shown in the drawing.

> **INSTALLER TIP**
> Leave enough slack at the motor for the drive to move through its full stroke. Final connections to the supply are made by a licensed electrician (see Section 06).

SECTION 06

Wiring and first start-up

All line-voltage work must be done by a licensed electrician to the NEC and local code.

ELECTRICAL CONNECTION

- The Haven drive is a low-voltage linear actuator (Timotion TA16). It runs from the transformer and control unit housed inside the motor post.
- Provide a dedicated, **GFCI-protected** 120 V circuit to the motor post, or a weatherproof in-use outlet within 1.5 m (5 ft) of it.
- Use outdoor-rated cable and fittings. Seal every cable entry against water.
- Keep low-voltage motor and LED cables apart from line-voltage wiring inside the post.
- Label the circuit breaker "Pergola".

> **TEST BEFORE YOU CLOSE UP**
>
> Connect and test the motor and LEDs **before** you fit the post covers and close the profiles. It is much easier to fix a connection now.

FIRST START-UP

01 Check that every louver turns freely by hand and that no tools, film or packaging are left on the roof.

02 Switch on the circuit. Pair the remote or wall control with the control unit following the instructions supplied with it.

03 Open the roof fully, then close it fully. Watch the drive arm and sigma bar: all louvers should move together, smoothly and without noise.

04 The motor stops at its built-in end positions. In the closed position the louvers must overlap evenly and the gaskets must touch along their full length.

05 Switch the LEDs on and test the dimmer range.

06 Run a water test on the closed roof with a garden hose. Check that water runs to the gutters and drains out at the post bases with no drips inside.

> **IF THE LOUVERS MOVE THE WRONG WAY**
>
> If "open" closes the roof, stop and have the electrician swap the motor direction at the control unit. Do not force the louvers by hand while the motor is powered.

SECTION 07

Final inspection and handover

Complete this checklist with the owner before you leave the site.

Structure

- [ ] Posts plumb and anchored; all anchors tight
- [ ] Frame diagonals within 3 mm (1/8 in)
- [ ] All bolts and screws fitted and tight; no parts left over
- [ ] Post caps and covers fitted

Roof and drive

- [ ] Louvers open and close fully and evenly
- [ ] No rubbing, clicking or binding in any position
- [ ] Gaskets seated along every louver and gutter joint
- [ ] Drive arm and sigma connections checked twice

Water

- [ ] Water test passed with the roof closed
- [ ] Every draining post discharges at its outlet
- [ ] Splash blocks or drains in place at the post bases
- [ ] Silicone joints neat and fully sealed

Electrical and handover

- [ ] Wiring done and checked by a licensed electrician
- [ ] Remote paired; LEDs and dimmer working
- [ ] Owner shown how to open, close and use the system
- [ ] Site cleaned; film removed; photos taken for registration

INSTALLED BY (COMPANY)

INSTALLATION DATE

OWNER SIGNATURE

INSTALLER SIGNATURE

SECTION 08

Warranty and registration

Your Haven system is covered by the Pergolast Haven Collection Limited Warranty.

COMPONENT	TERM
Structural frame: posts, beams, gutters, base plates	**10 years**
Powder coat finish	**7 years**
Louvers, motors and drive mechanism	**5 years**
LED lighting, remotes, sensors, receivers	**2 years**
Gaskets, seals and accessories	**2 years**
Installation by Pergolast	**2 years parts, 1 year labor**

Summary only. The full terms, exclusions and claim process are in the Pergolast Haven Collection Limited Warranty, which governs.

Installed by a contractor

Systems installed by a contractor other than Pergolast carry the Pergolast **Product Warranty**: materials are covered, and the installation is the contractor's responsibility. Coverage requires that:

- [ ] The system is installed to this guide and the shop drawings.
- [ ] Footings and anchors follow the engineered design and local code.
- [ ] Motorized parts are connected by a licensed electrician.

Damage caused by the installation, such as incorrect anchoring, sealing, leveling or wiring, is not covered.

REGISTER THE INSTALLATION

Within 30 days of completion, email **service@pergolainstaller.com** with the order or invoice number, installation address and date, installer company name, and photos of the finished system, the anchoring and the electrical connections.

SECTION 09

Care and maintenance

A few minutes of care each season keeps your Haven looking and working like new.

Cleaning

- Wash the frame and louvers with water and a mild, non-abrasive soap using a soft brush or sponge, then rinse.
- Do not use pressure washers, solvents, abrasive pads or chlorine cleaners.
- Near the coast or pools, rinse with fresh water every month to remove salt and chlorine.

Seasonal checks

- Spring and fall: clear leaves and debris from the louvers and gutters, and check that every post drains freely.
- Once a year: check that anchors, bolts and post covers are tight, and look over gaskets and silicone joints.
- Open and close the roof fully at least once a month to keep the drive moving.

Weather

- **Snow:** close the louvers before snow and do not operate them while covered in snow or ice. Clear heavy snow with a soft broom.
- **High wind:** close the louvers when strong winds or storms are forecast.
- **Freezing:** if the louvers are frozen shut, wait for them to thaw. Never force them.

DO NOT

Hang heavy objects from the louvers or frame, place heaters too close to the profiles, or let anyone climb on the roof.

SECTION 09

Troubleshooting

Switch off power at the breaker before working on the drive or electrical parts.

PROBLEM	LIKELY CAUSE	WHAT TO DO
Louvers do not move	No power; tripped GFCI or breaker; remote not paired	Reset the GFCI and breaker, replace remote batteries, re-pair the remote. If it still does not move, contact support.
Motor runs but louvers do not move	Loose drive arm or sigma connection (steps 09–14)	Switch off power. Check bolts (26), (31), (37–41) and (43) are fitted and tight.
Louvers move unevenly or bind	Frame out of square; louver shaft or bushing not seated	Check frame diagonals and post plumb. Check each louver turns freely by hand with the drive disconnected.
Water drips through closed roof	Gasket out of its channel; debris on louvers; louvers not fully closed	Clean the louvers, re-seat gaskets (12), and check the closed position at start-up.
Gutter overflows	Blocked gutter outlet or downpipe in the post	Clear leaves from the gutter and flush the downpipe with a hose.
Water leaks at a gutter joint	Gasket (09) pinched or silicone joint failed	Re-seat the gasket and re-seal the joint with neutral-cure silicone.
LEDs do not light or flicker	Loose LED connection; dimmer or transformer fault	Check connections at the motor post. Have the electrician test the transformer output.
Clicking or squeaking	Dry or worn bearing (16, 28); loose fastener	Check pivot points and fasteners. Contact support for replacement bearings.

STILL NEED HELP?

Email **service@pergolainstaller.com** with your order number, a description of the problem and photos or a short video. Please do not repair or alter the system before talking to us, as this may affect your warranty.

PERGOLAST
By GLASS GROUP

Open sky at noon. A dry roof by dinner.

INSTALLATION, PARTS AND WARRANTY SUPPORT

service@pergolainstaller.com

Haven · Haven Pro · Haven Net · Haven Fold · Haven Shade · Haven Rise · Haven Clear · Haven Glide

Haven Installation Guide · Version 1.0 · November 2026. Specifications and procedures may change without notice. Always follow the shop drawings supplied for your project.