PERGOLAST
By GLASS GROUP



INSTALLATION MANUAL

Haven Net

Retractable vinyl roof pergola. Step-by-step for your contractor or Pergola Installer.

Five steps, about 8 hours on site for a 20′ × 13′ unit

2+ people

Licensed electrician for power

Before you start: 4 rules

Never install alone
This is a job for two people or more. Panels and beams are heavy.

Check every part first
Lay all parts out in the order you will use them. Count them against the parts list.

Base comes first
Pour footings or check the slab before delivery day. Follow the PE-reviewed design and local code.

Power by an electrician
A licensed electrician connects the motor to a US 120 V / 60 Hz supply.

Tools you need

- Tape measure
- Spirit level
- Drill
- Hex keys
- Wrench
- Work gloves
- Safety glasses
- 2 step ladders
- Concrete screws

The 5 steps at a glance

STEP 1
Frame, gutters and rails
Stand the posts, fix the gutters and rails, and level everything.

STEP 2
Motor and fabric
Mount the motor and pull the fabric set into the rails.

STEP 3
LED lighting
Fit the light strips and spots.

STEP 4
Side gutters and power
Close the side gutters. Your electrician connects the power.

STEP 5
Covers and final check
Clip on the covers, then open and close the roof to test it.

How to use this manual

Find your parts by code
Every part has a code, like HN 11. The same code is on the parts list and the box.

Follow the steps in order
Do not skip ahead. Each step builds on the one before it.

Stuck? Call us
Pergola Installer · (908) 772-8189. We'd rather answer a question than fix a mistake.

Introduction

Thank you for choosing Pergolast Haven Net.

These instructions give the tips and key information you need to assemble the product safely and maintain it properly.
Read all of the instructions carefully before you start, and follow the steps in the order given.

1. Make sure you have all the parts you need.
2. Lay the parts out in order around the installation area.
3. Mark out the installation area.
4. Pour a concrete footing (for sand or soft ground).

WARNING:
NEVER INSTALL
ALONE!

5. Make sure you have all the installation tools you need:

- Tape Measure



- Work Gloves



- Safety Glasses



- Concrete Screw (Buldex)
Threaded Rod & Nut

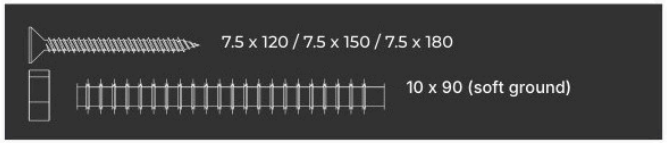

- Drill



- Hex Key Set



- Spirit Level

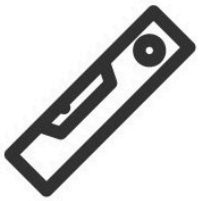

- 2 Small Step Ladders



- Wrench



Parts List

Part quantities vary by project size!

Pillar Parts

HN 11
Pillar
Profile

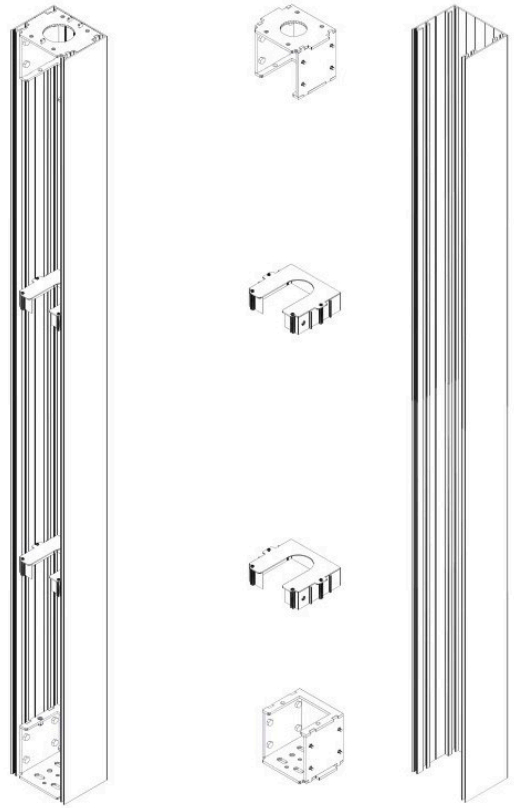

Covers and Drainage Parts

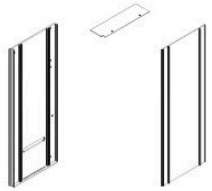

HN 12 Pillar
Side Caps



HN 15
Filter



HN 13
Pillar
Front
Cover

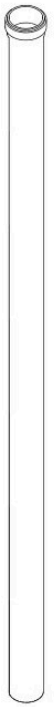

HN 16
Pillar
Pipe



HN 14
Bottom
Water Box



HN 17
Water Box
Outer Part

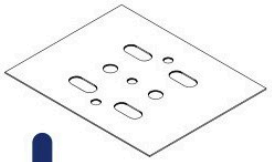



Layout
Plate

Parts List

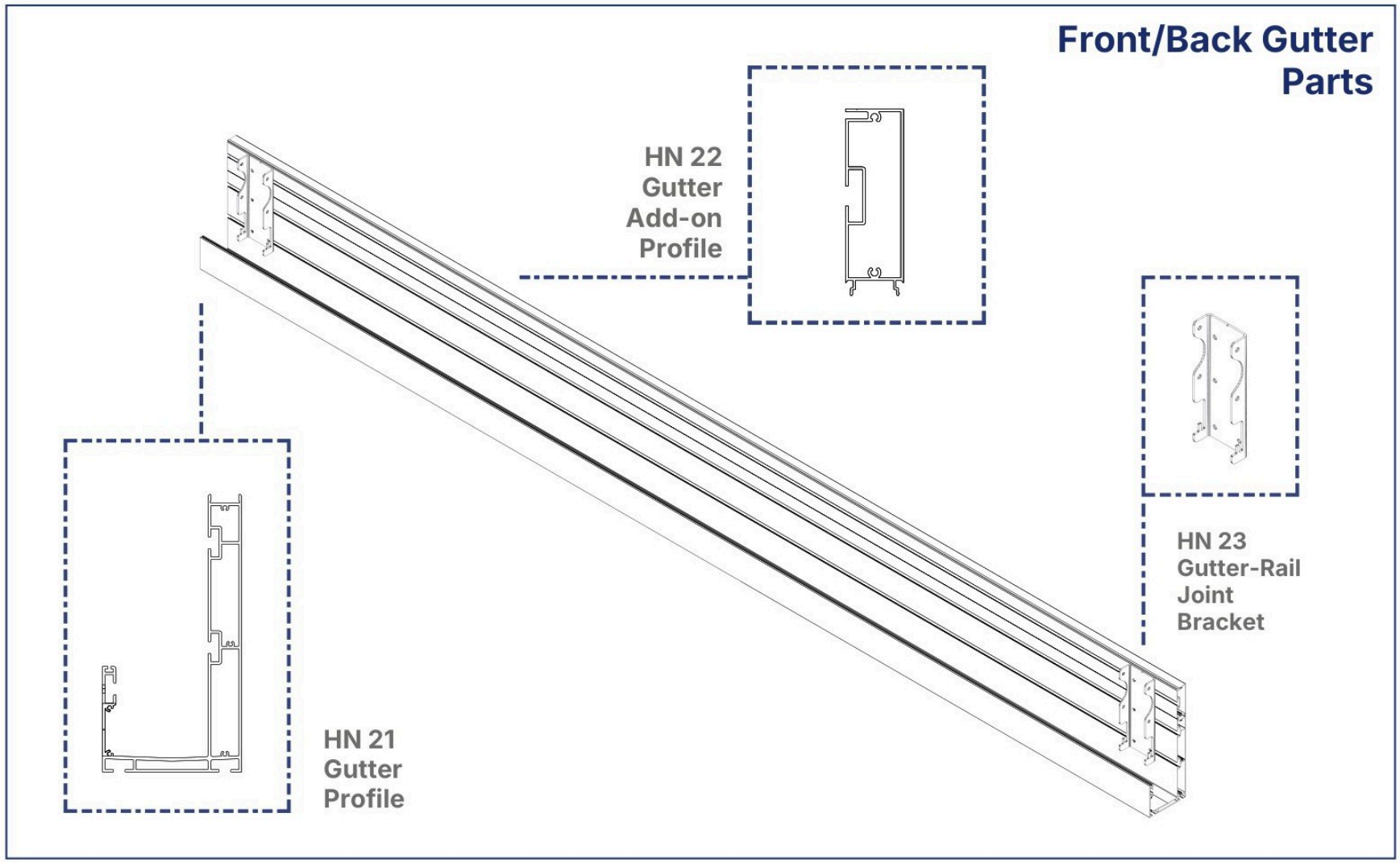
Front/Back Gutter Parts
HN 22 Gutter Add-on Profile
HN 23 Gutter-Rail Joint Bracket
HN 21 Gutter Profile

Parts List

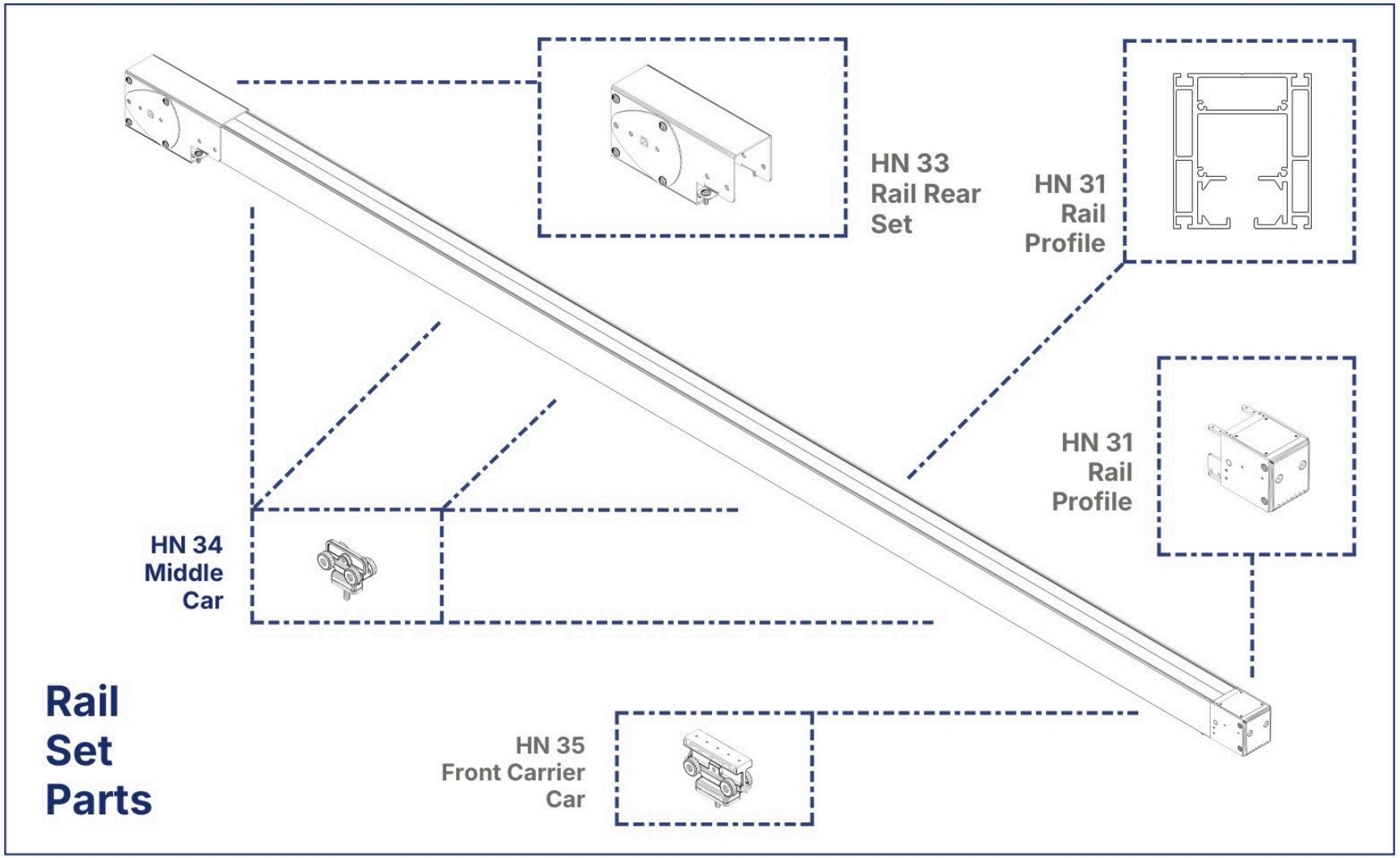
HN 33
Rail Rear
Set
HN 31
Rail
Profile
HN 31
Rail
Profile
HN 34
Middle
Car
HN 35
Front Carrier
Car
Rail
Set
Parts

Parts List

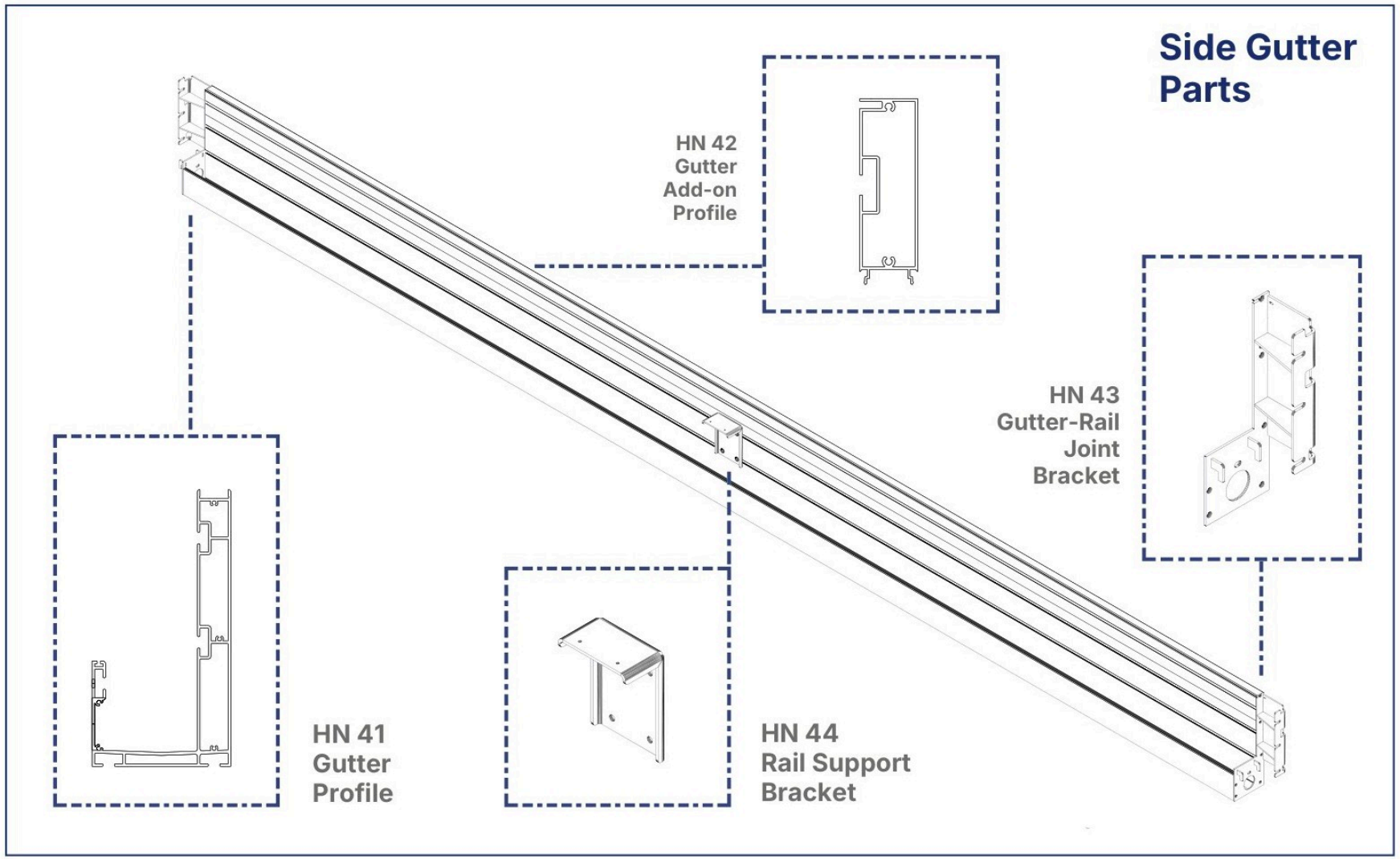
Side Gutter Parts
HN 42 Gutter Add-on Profile
HN 43 Gutter-Rail Joint Bracket
HN 41 Gutter Profile
HN 44 Rail Support Bracket

Parts List

Motor Assembly Parts



HN 51
Motor
Tube



HN 52
Motor

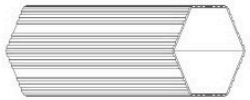

HN 53
Motor Tube
Joining
Bracket

Extra Parts

HN 61
Rail
Top
Cover

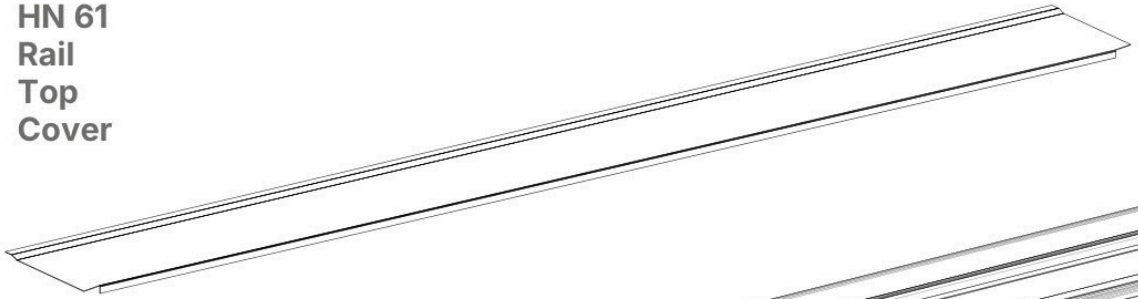

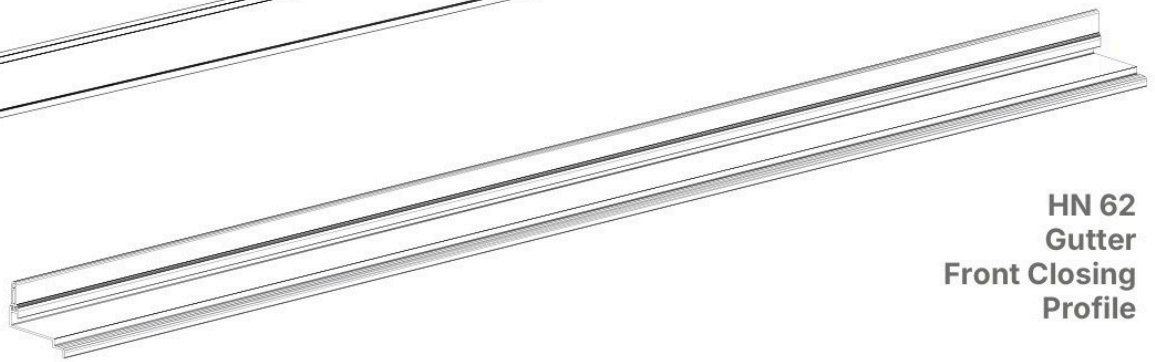

HN 62
Gutter
Front Closing
Profile

Parts List

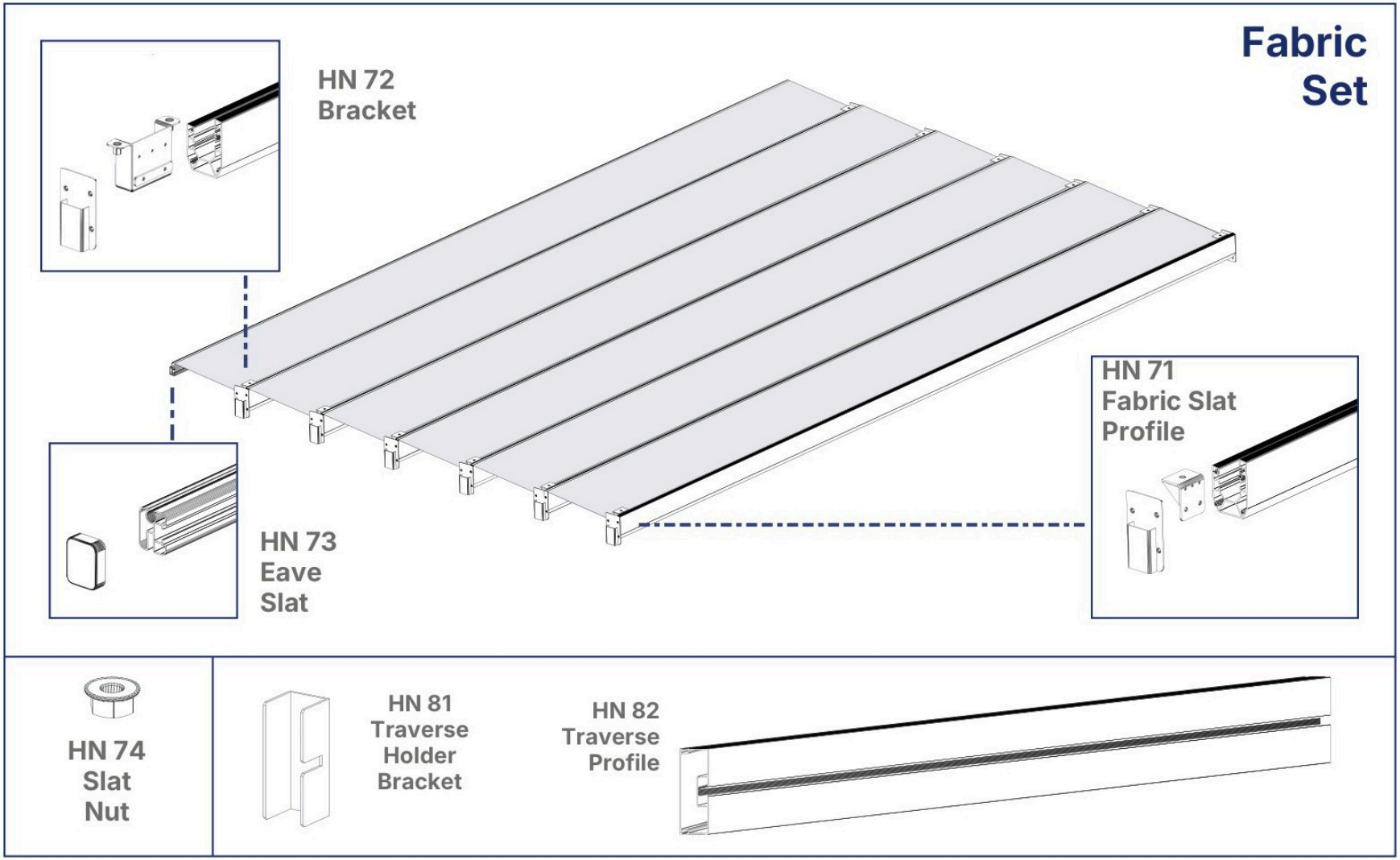
Fabric Set
HN 72 Bracket
HN 73 Eave Slat
HN 71 Fabric Slat Profile
HN 74 Slat Nut
HN 81 Traverse Holder Bracket
HN 82 Traverse Profile

Parts List

Roof Sheet

HN 91
Back
Roof Sheet

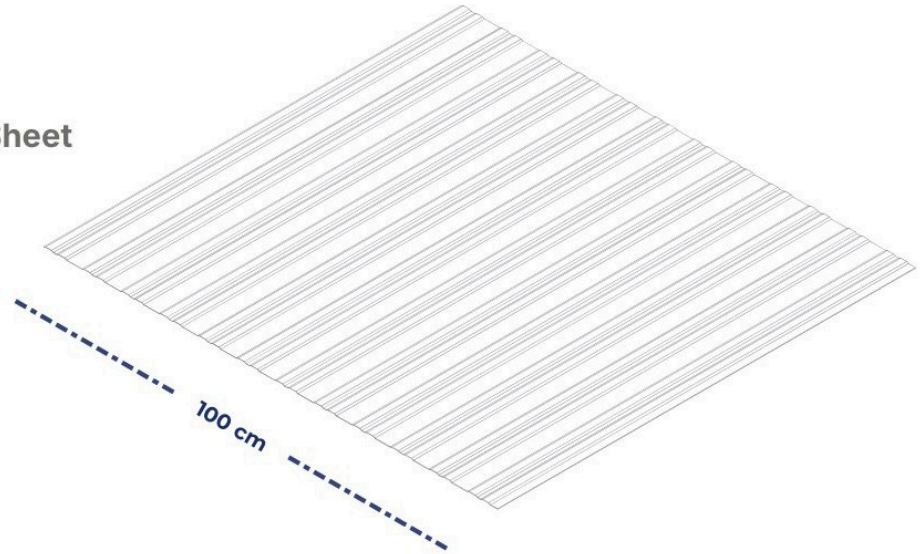

* Roof sheet is supplied in 1 m wide pieces. To suit the facade width set for the project, join the 1 m pieces as shown below. See the roof sheet installation page for details.

HN 92
Front
Roof Sheet

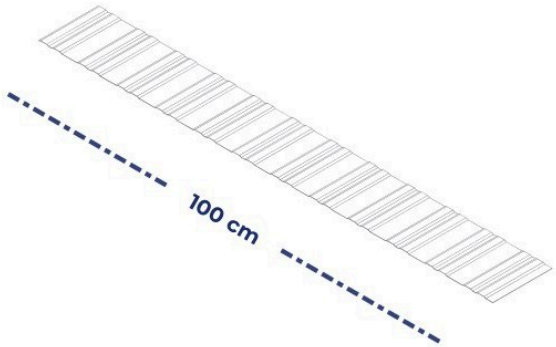

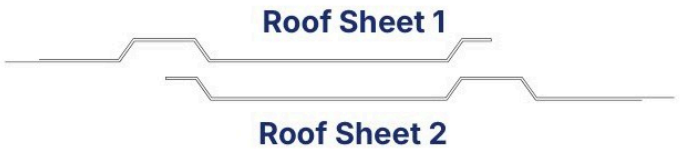

Parts List

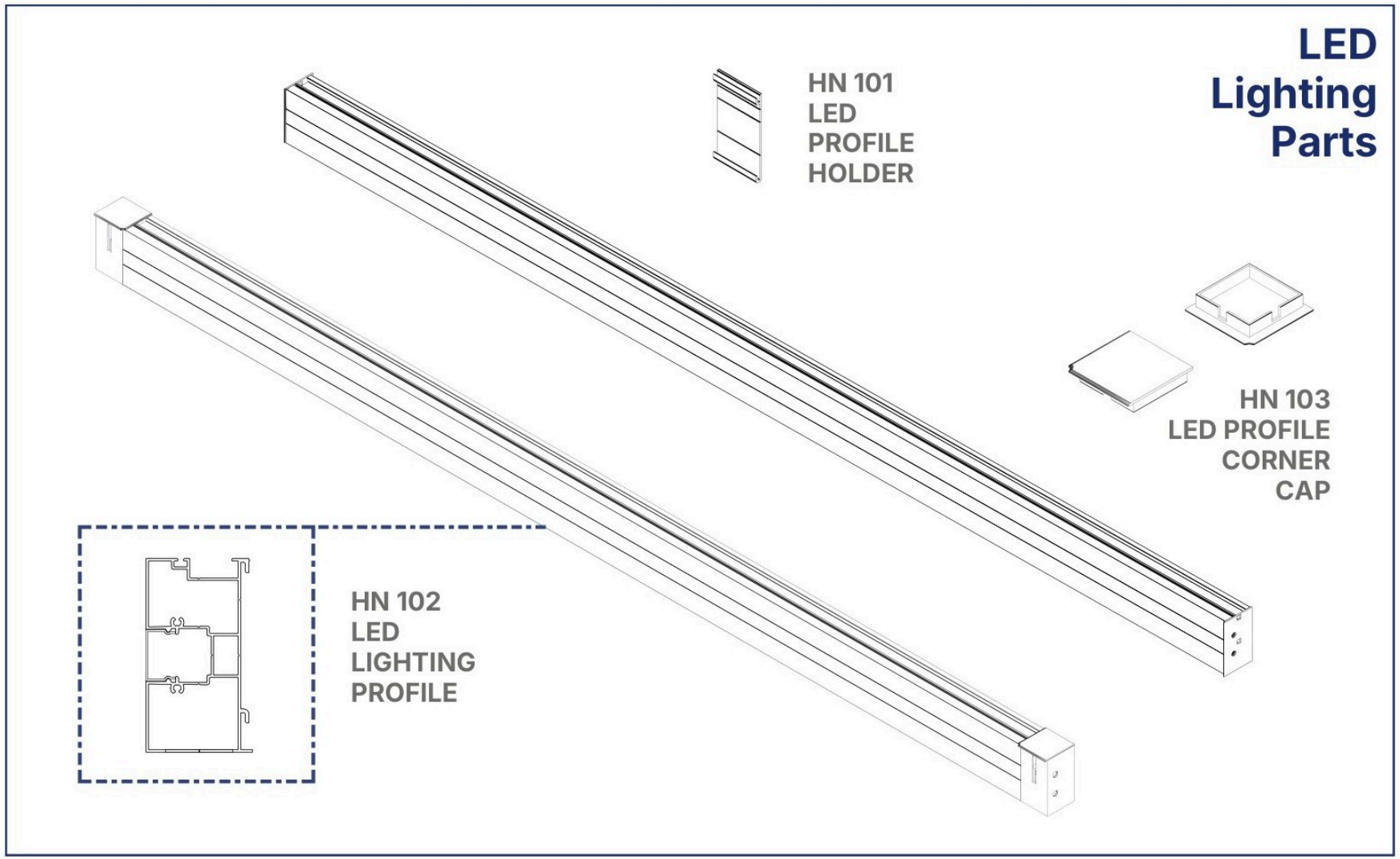
LED Lighting Parts
HN 101 LED PROFILE HOLDER
HN 103 LED PROFILE CORNER CAP
HN 102 LED LIGHTING PROFILE

Step 1.1

In the first step, decide where the product will be installed. Use the layout plates shipped with the product to mark the points where the pillars will be fixed.

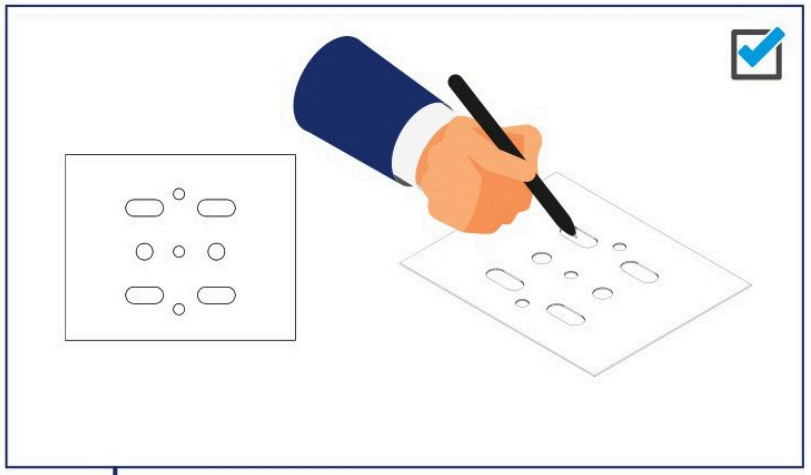

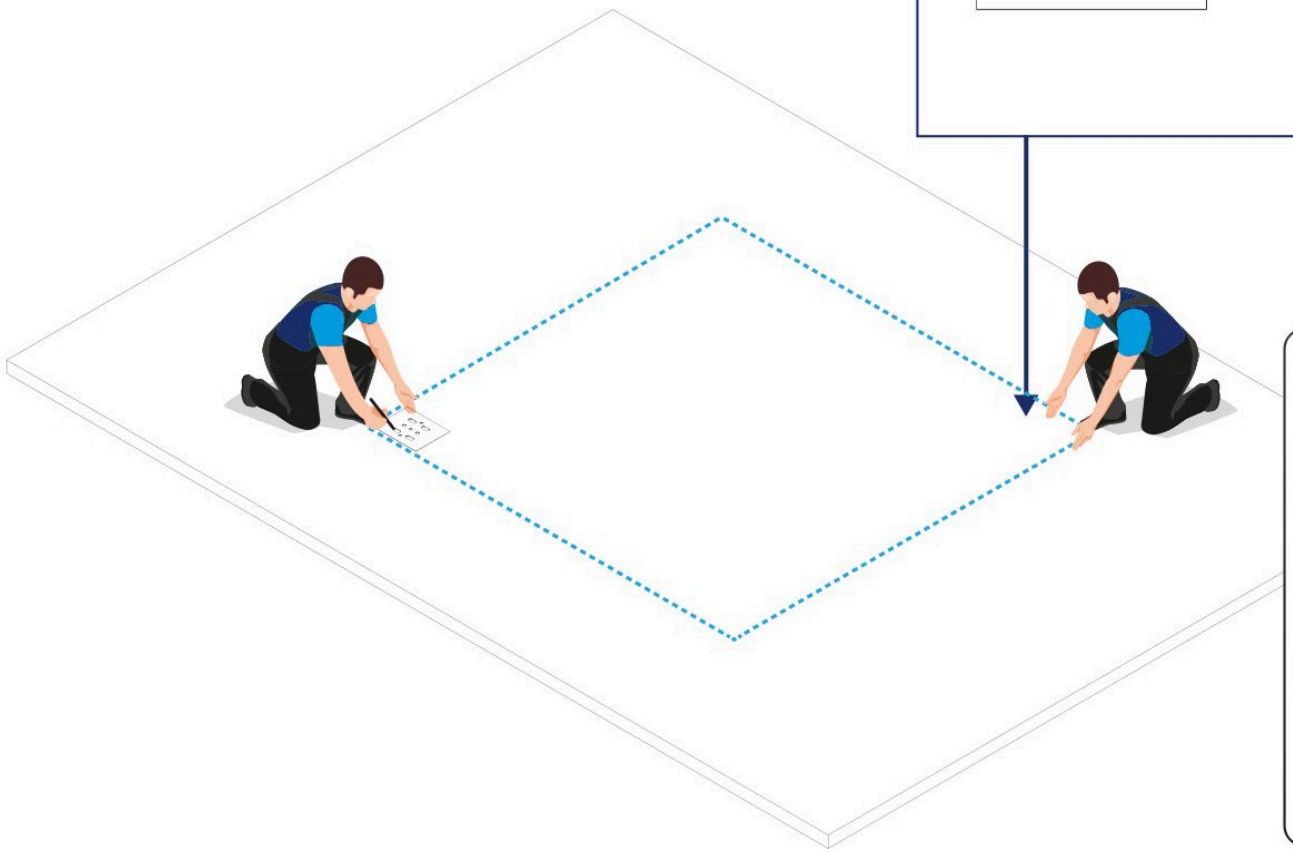

WARNING:
If the ground is sand or another soft type, prepare pad or strip footings for the product beforehand.

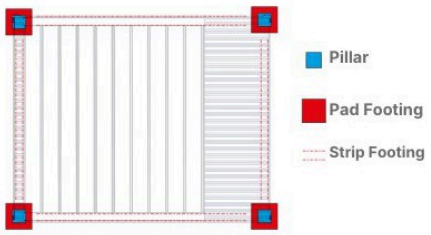

Step 1.2

In this step we join the HN11 pillars and the HN21 gutter profile, using the fixings shown on the right. First lay two pillars and one gutter flat and aligned on the ground. Then assemble them as shown on the right.

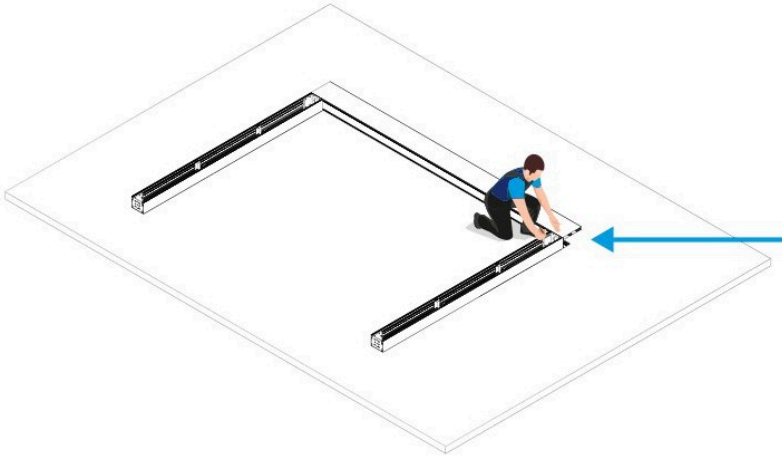

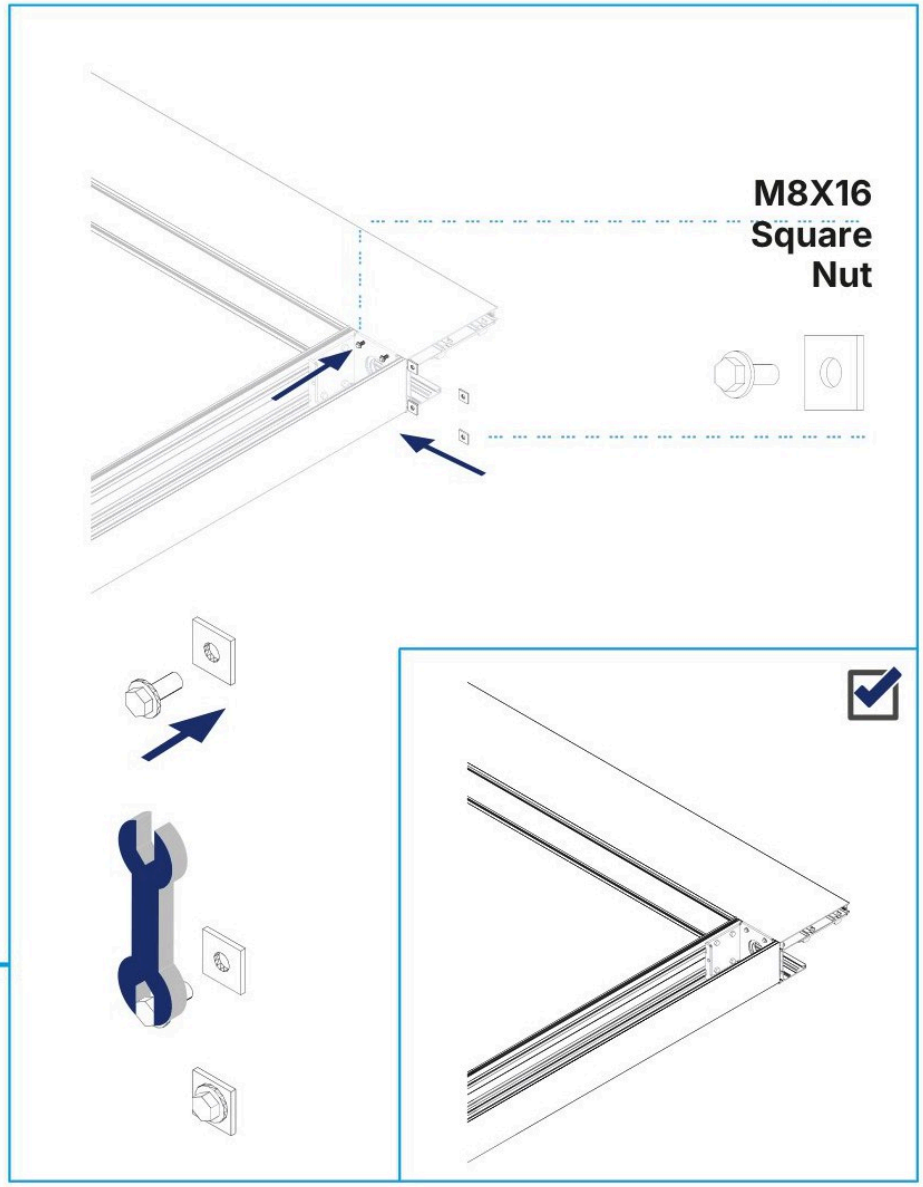

Step 1.3

In this step we fit the HN22 add-on profile to the HN21 gutter profile assembled earlier. Bring HN22 up to the gutter profile aligned on the ground and clip it on, as shown on the right.

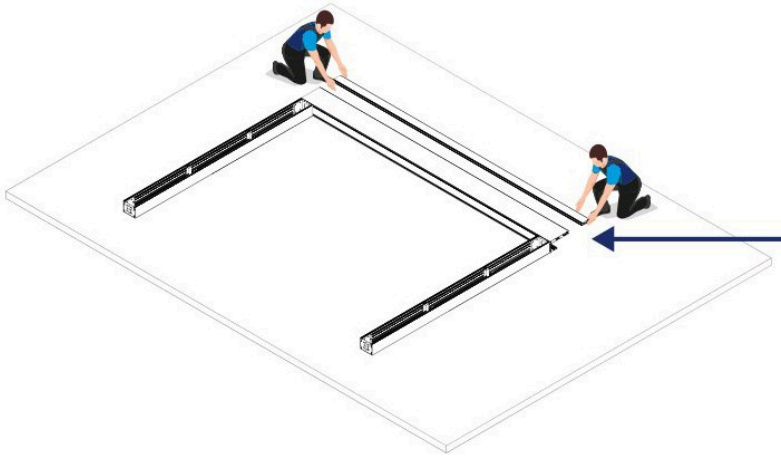

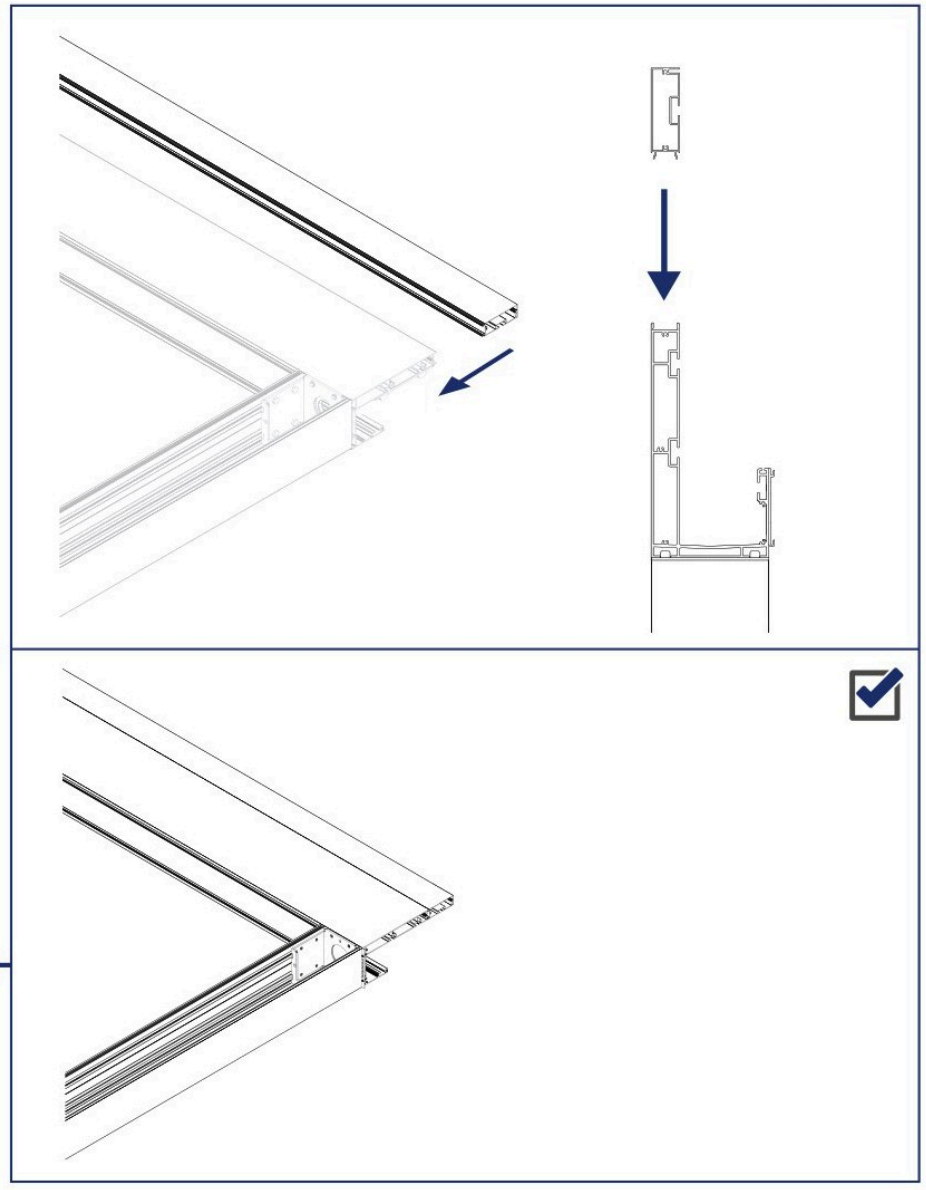

Step 1.4

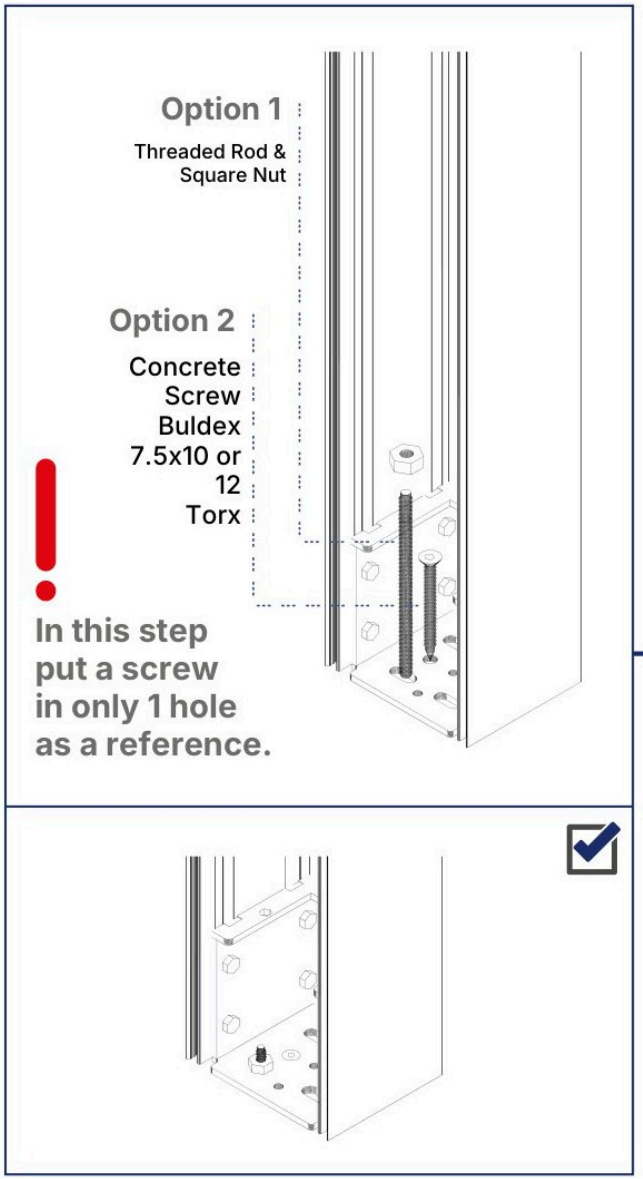

In this step we fix the pillars to the ground. Stand the finished front and back gutter-pillar frames and line the pillars up on the points marked with the plates in step 1. Fix each pillar through 1 or 2 holes, just enough to hold the system up (the ground fixing is completed after the diagonal check in a later step). For hard ground such as concrete, the concrete screw shown on the left is enough. For sand or other soft ground, always use threaded rod. Where needed, prepare footings as described in step 1.

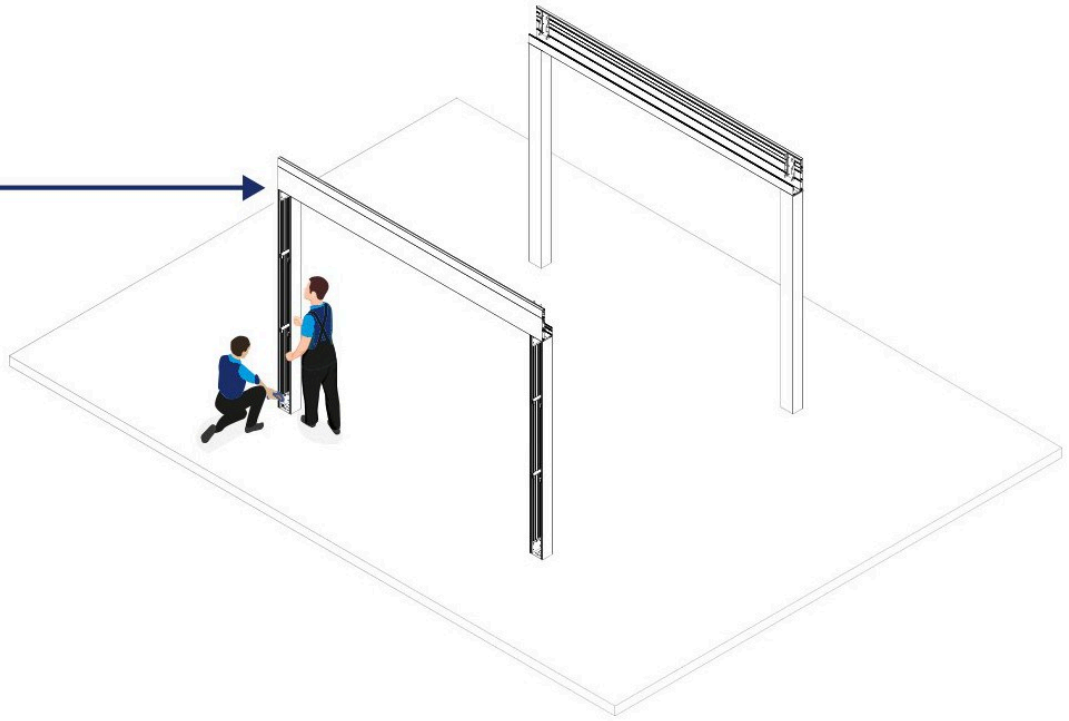

Where the back of the system is very close to a wall, the pillars can be turned 180° for easier installation (made this way if you tell us before production). After installing them this way, continue with the other steps as for a standard project.
EXTRA SOLUTION FOR SPECIAL PROJECTS!

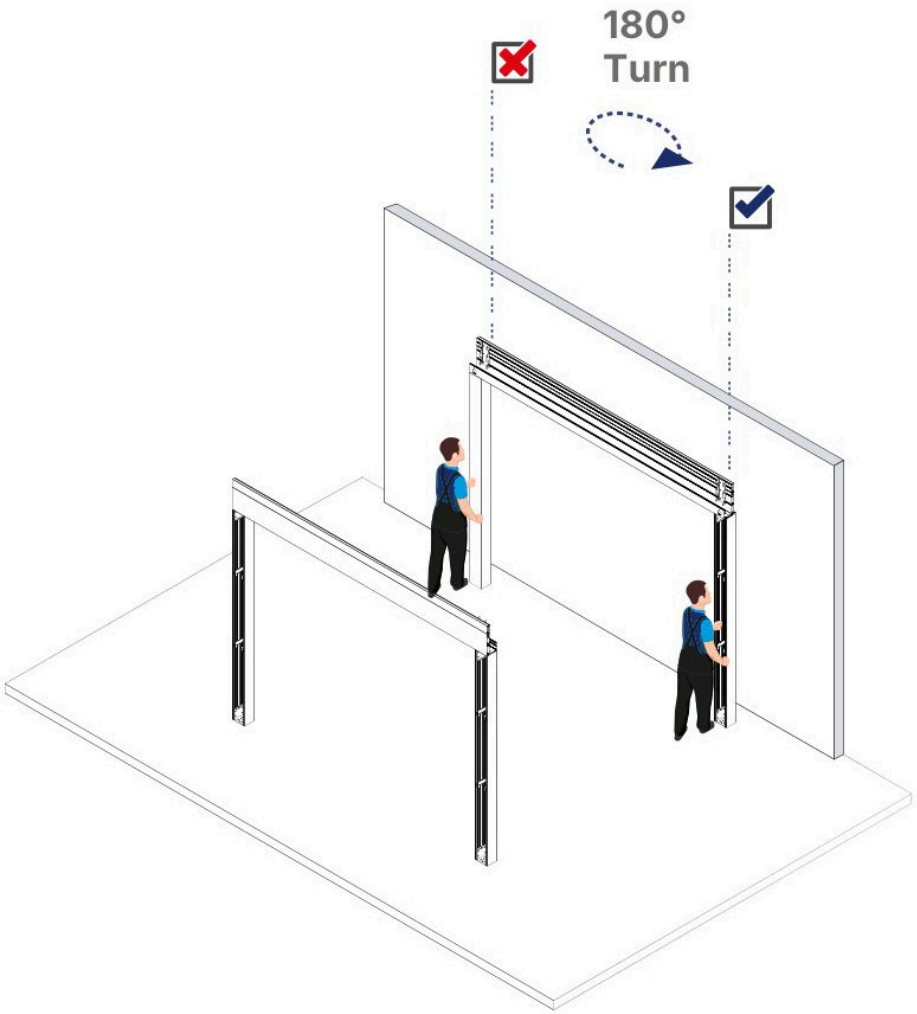

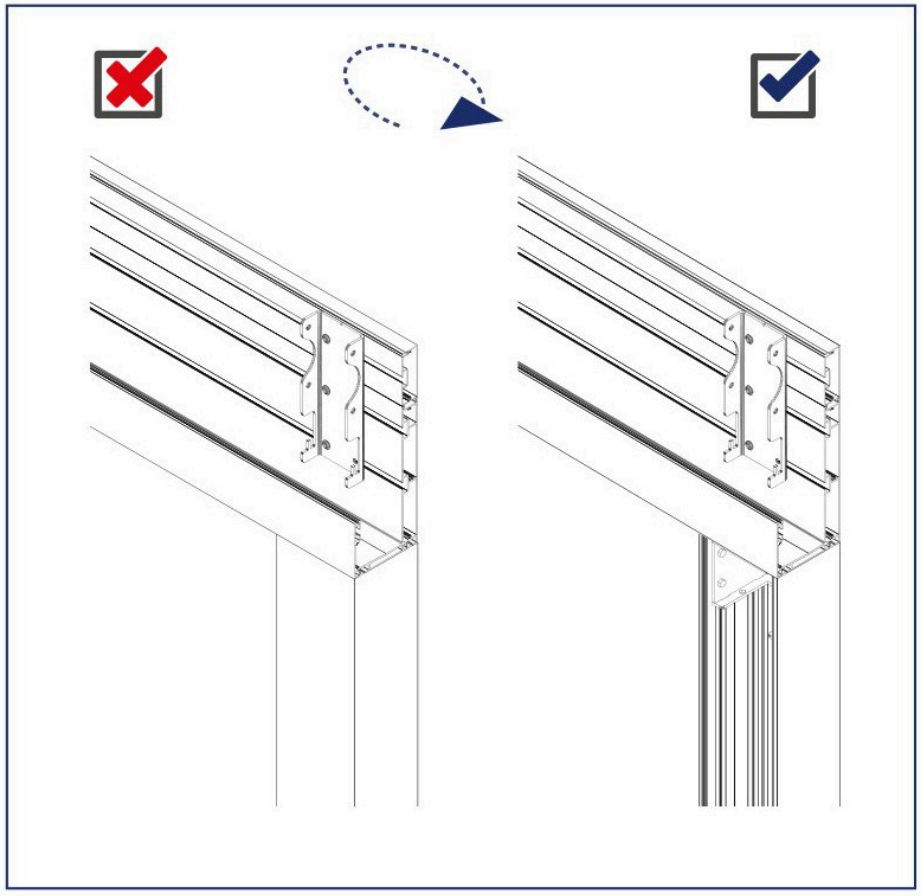

EXTRA SOLUTION FOR SPECIAL PROJECTS!

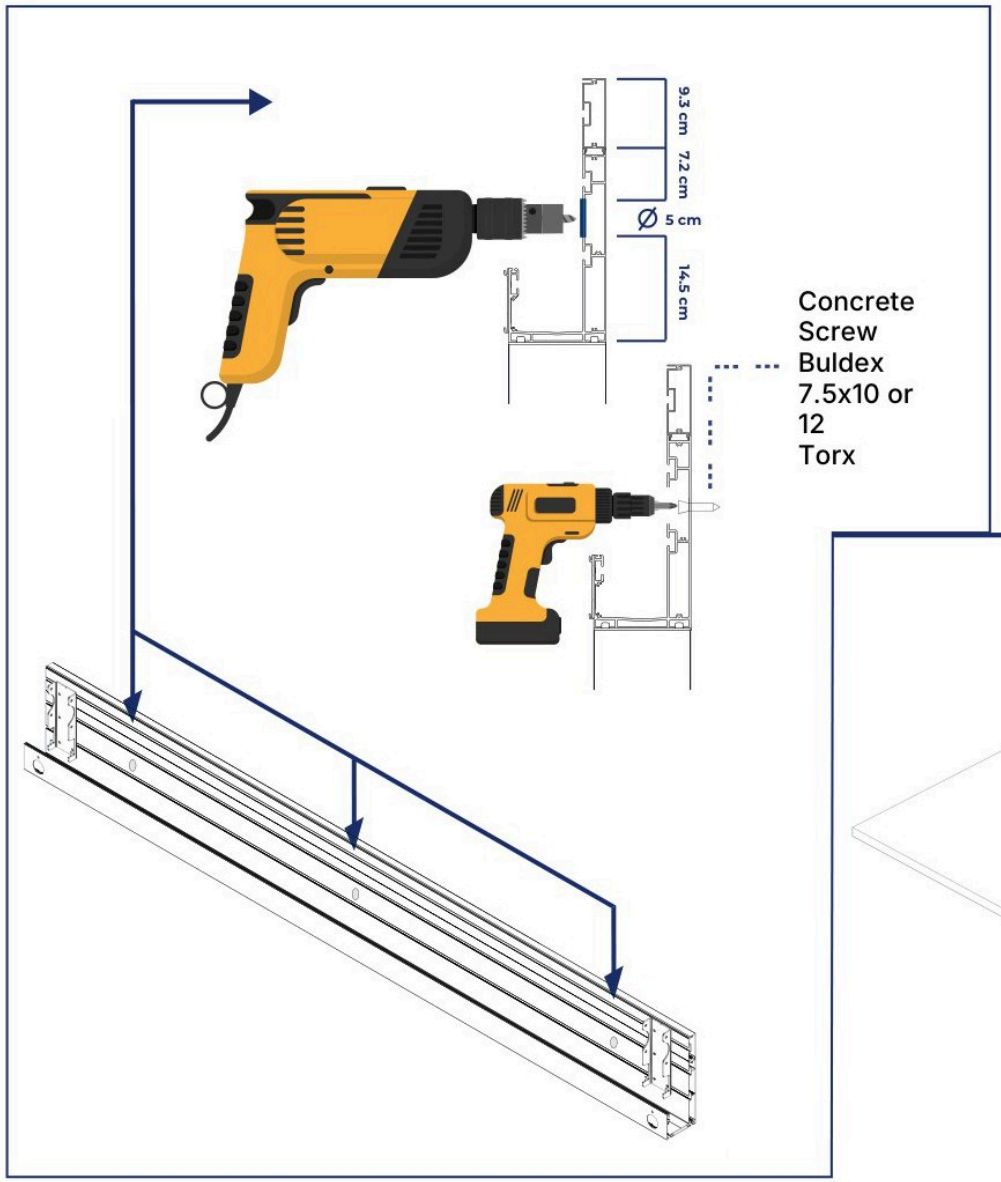

If your system is wall-mounted, fix the back gutter profile to the wall after the front pillars are fixed to the ground. To do this, drill through the inner wall of the profile as shown below and fix it to the wall with concrete screws.

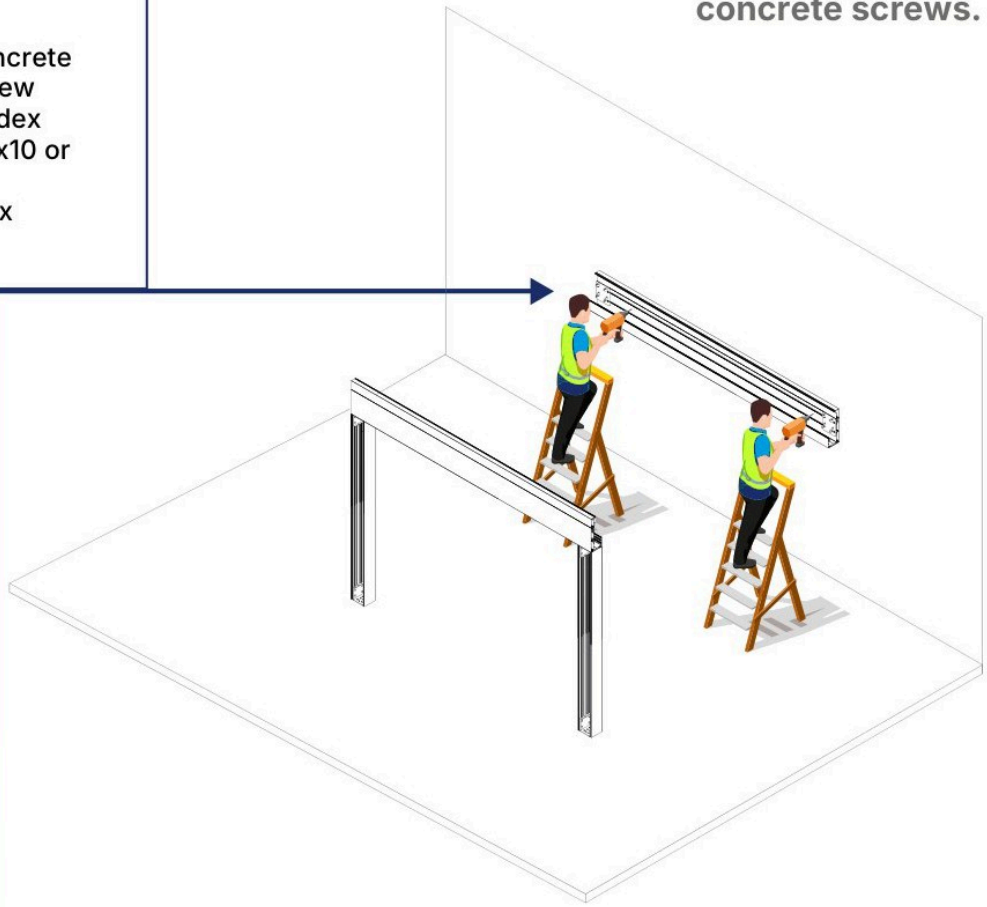

Gutter profiles ship without drain holes. Drill the drain holes yourself to suit your project plan. When the pillars are installed, drill with a diamond core bit as shown on the right.

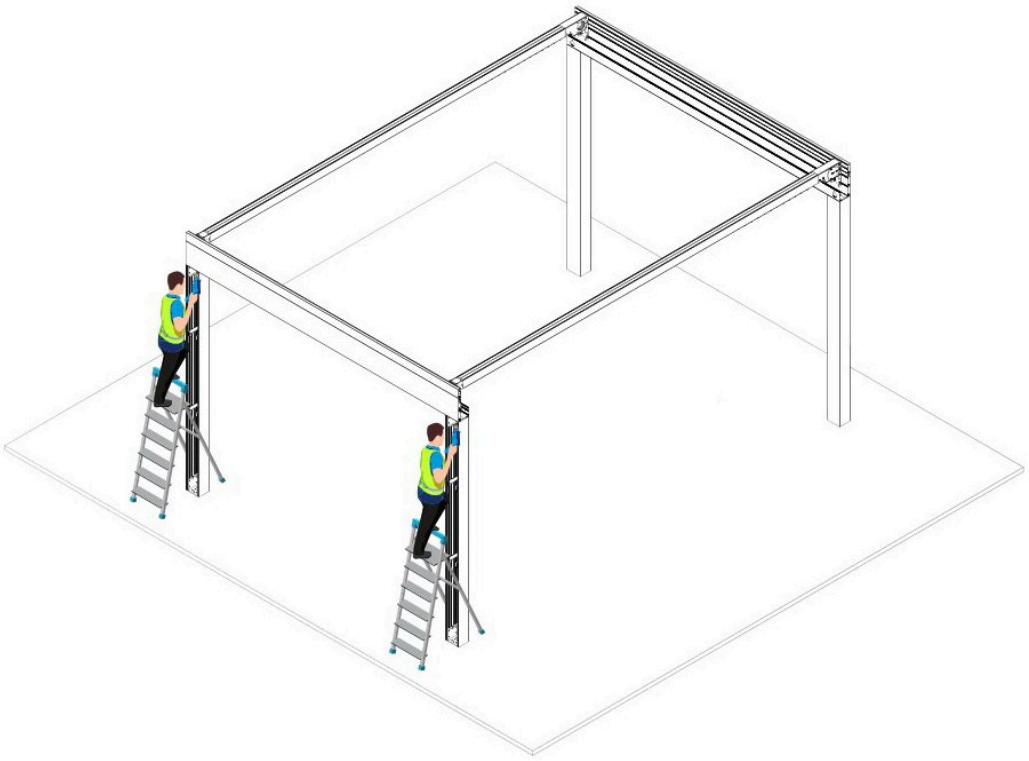

Step 1.5

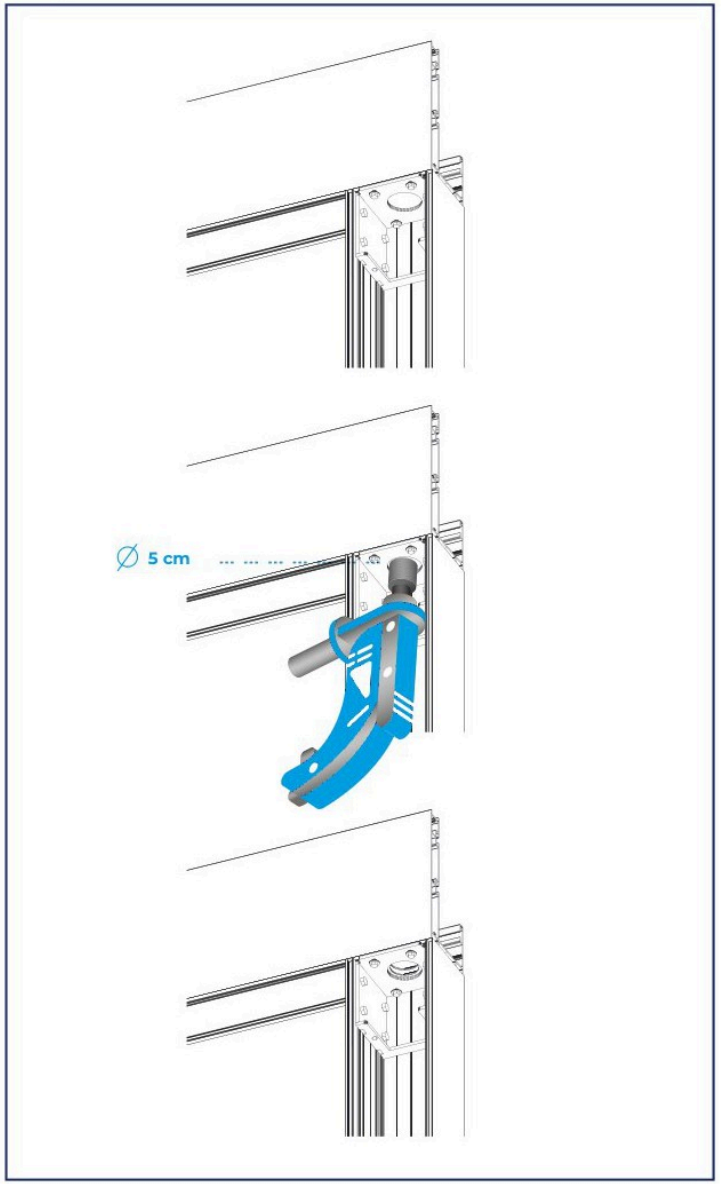

Step 1.6

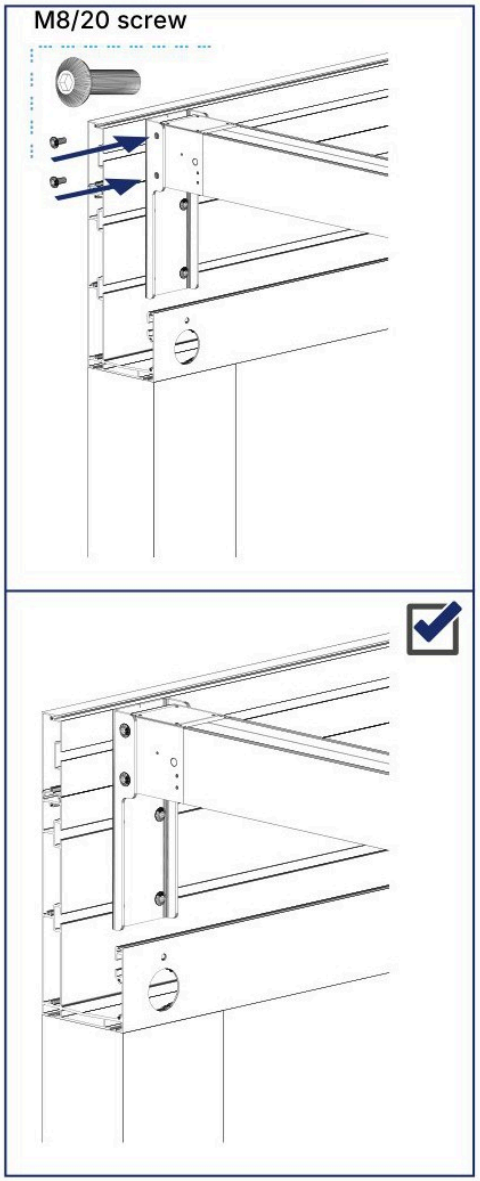

In this step we install the rails. Line up each HN31 rail set with the system and seat it into the HN23 rail-gutter brackets on the front and back gutter profiles. Fix it as shown in the pictures.

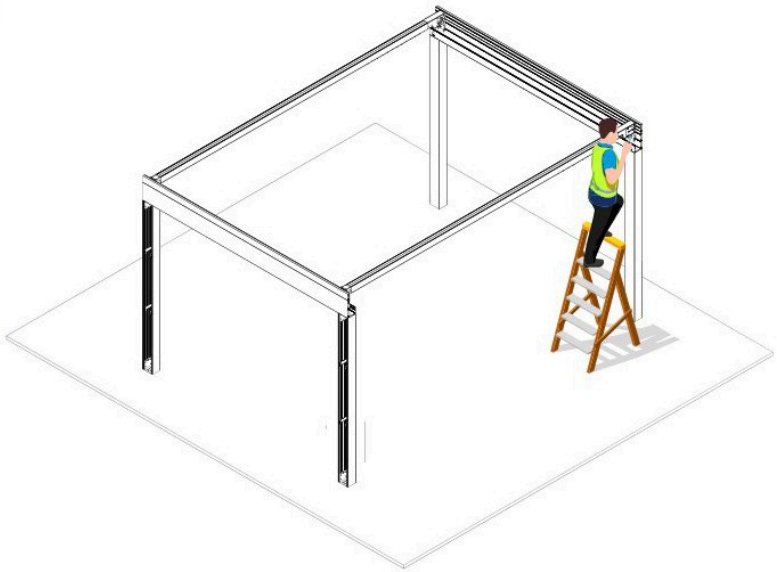

Step 1.7

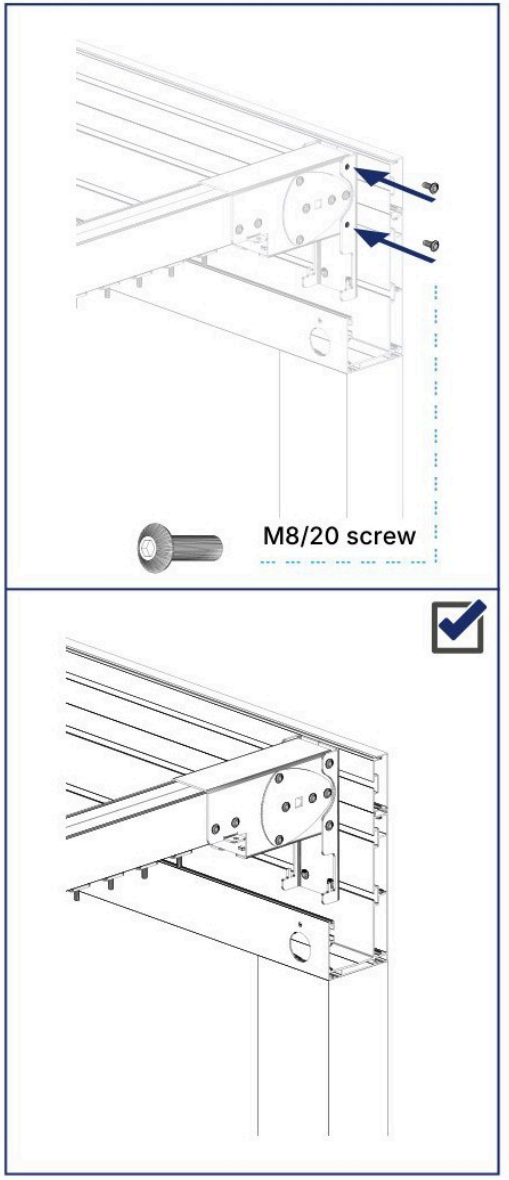

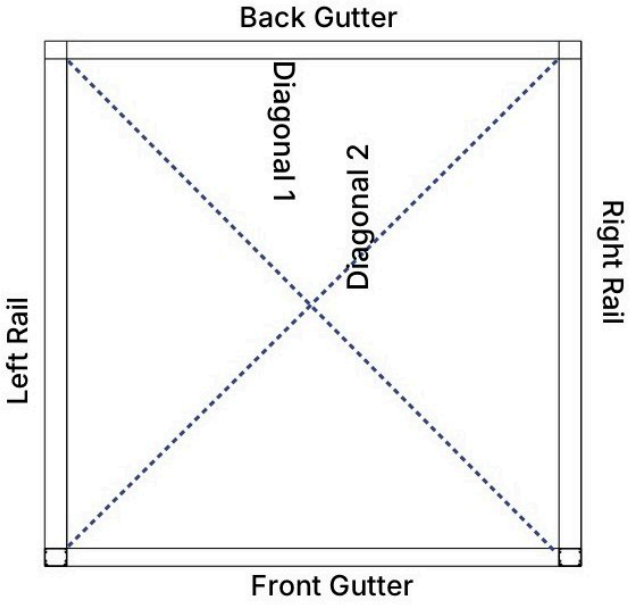

Step 1.8

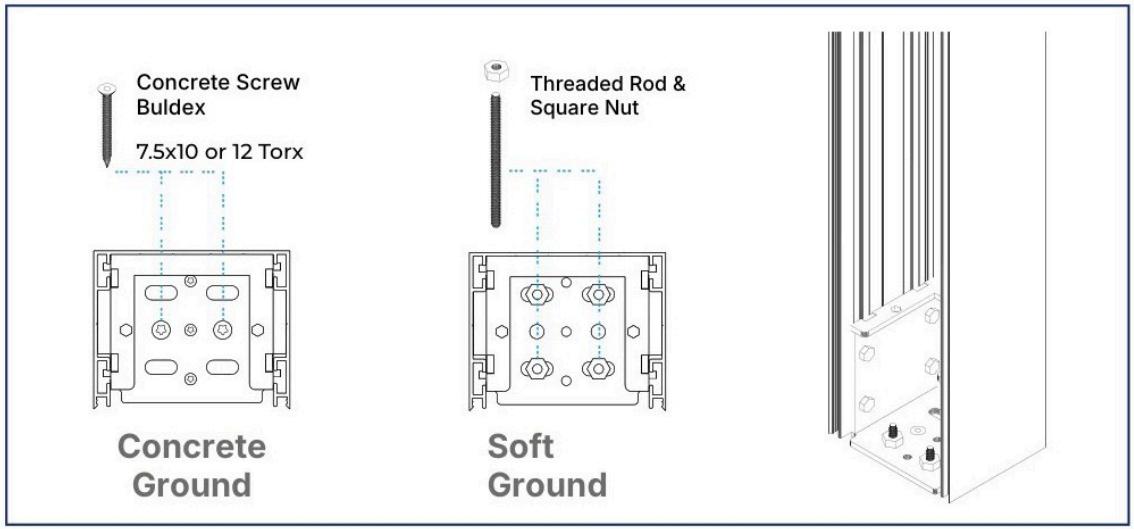

In this step we check that the diagonals of the main frame are equal. If every dimension is correct, install the anchors left out in the earlier step, as shown above.

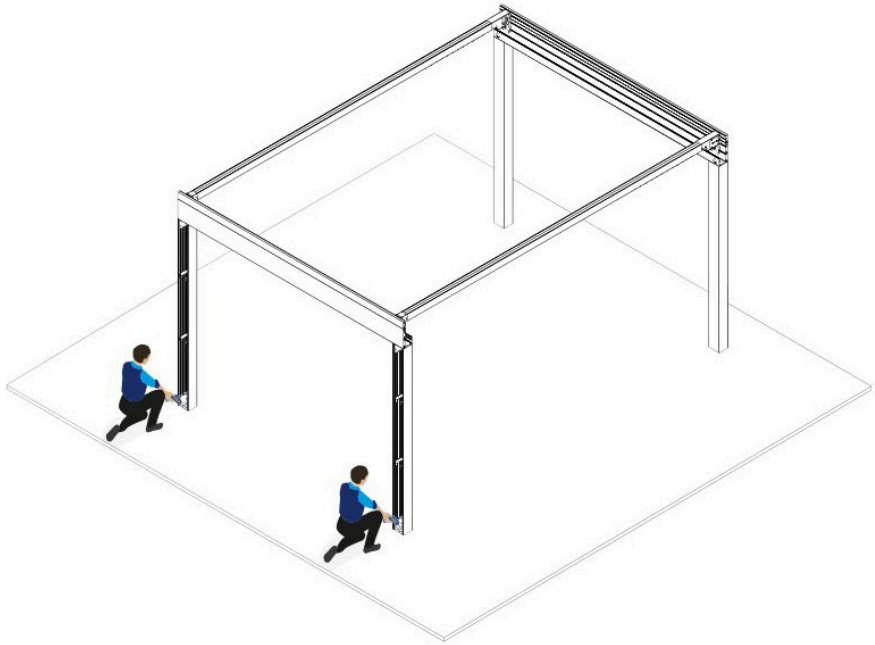

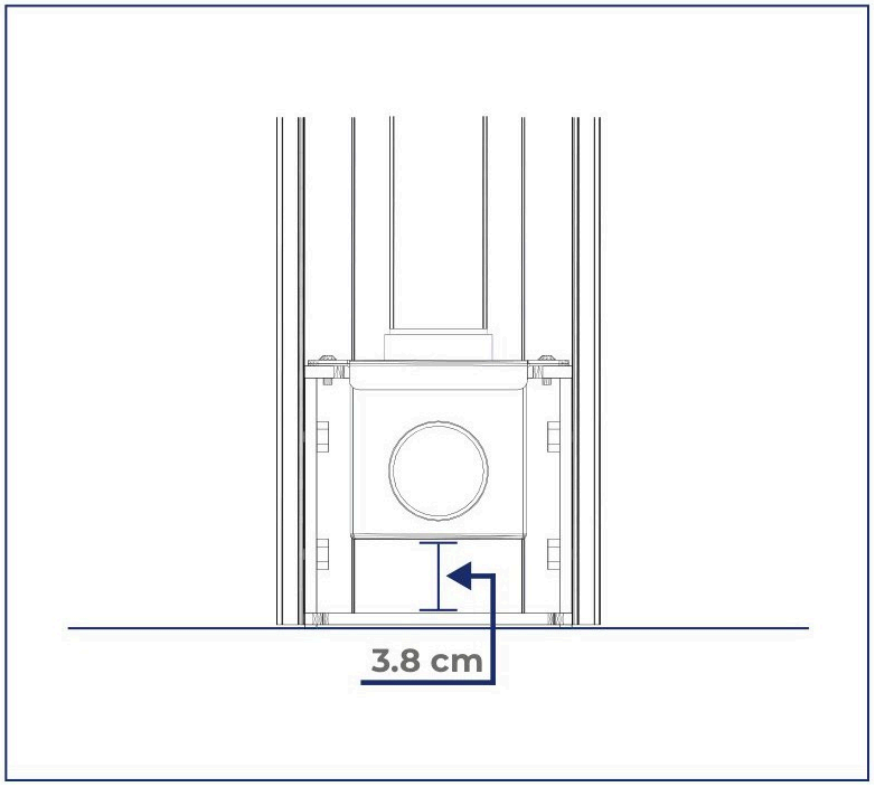

Before going on, check that the bottom of the pillar water box is 3.8 cm above ground level. If the dimensions are correct, continue the installation.

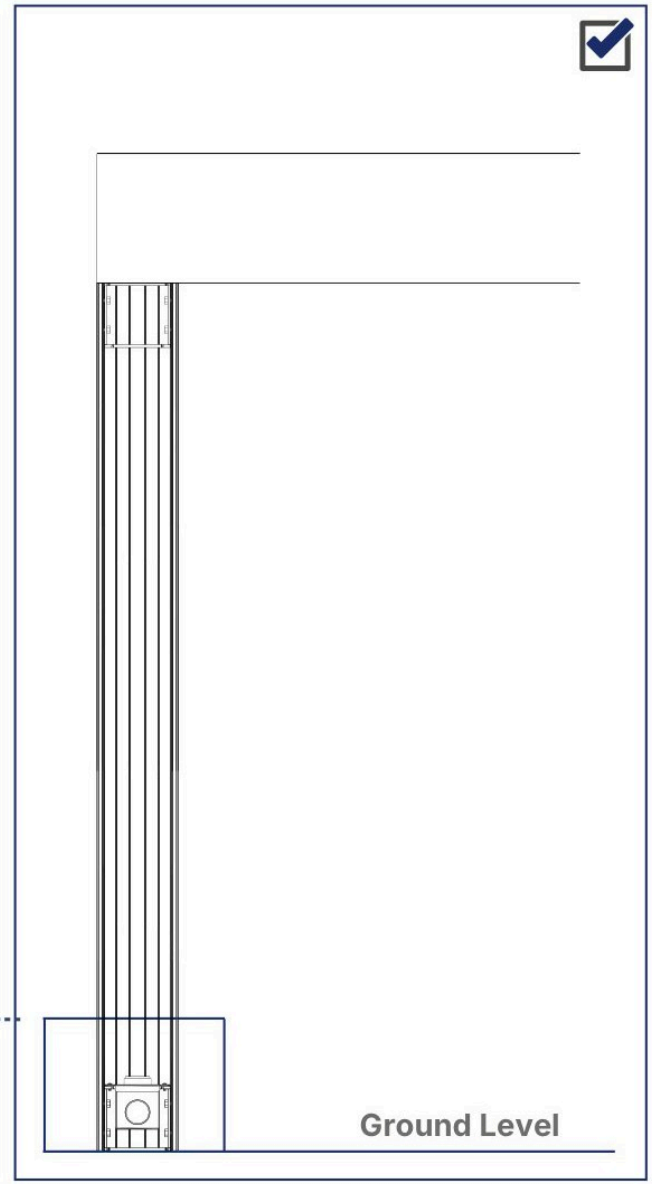

Step 1.9

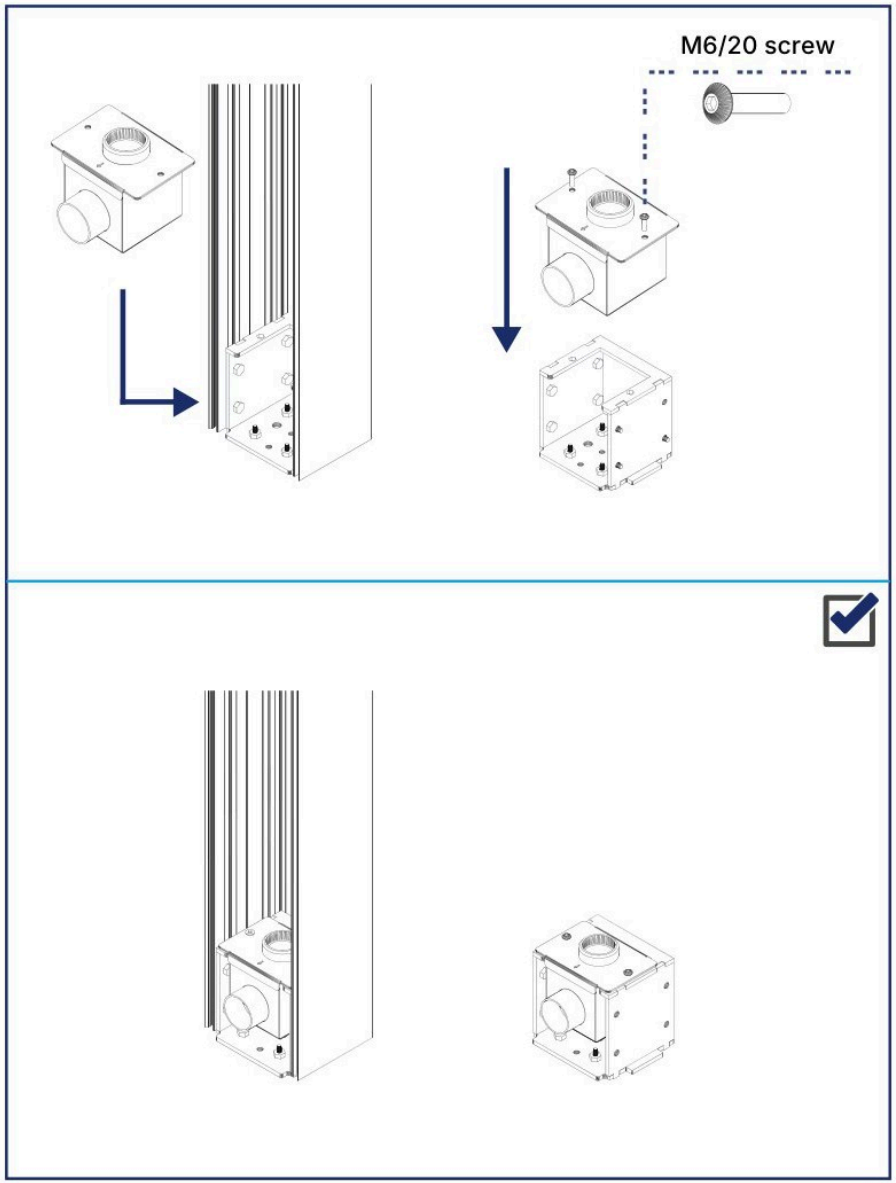

In this step we fit the pillar water box. It is one part with a drain hole and a top plate with screw holes. Fix it inside the pillar with 2 screws, as shown on the left.

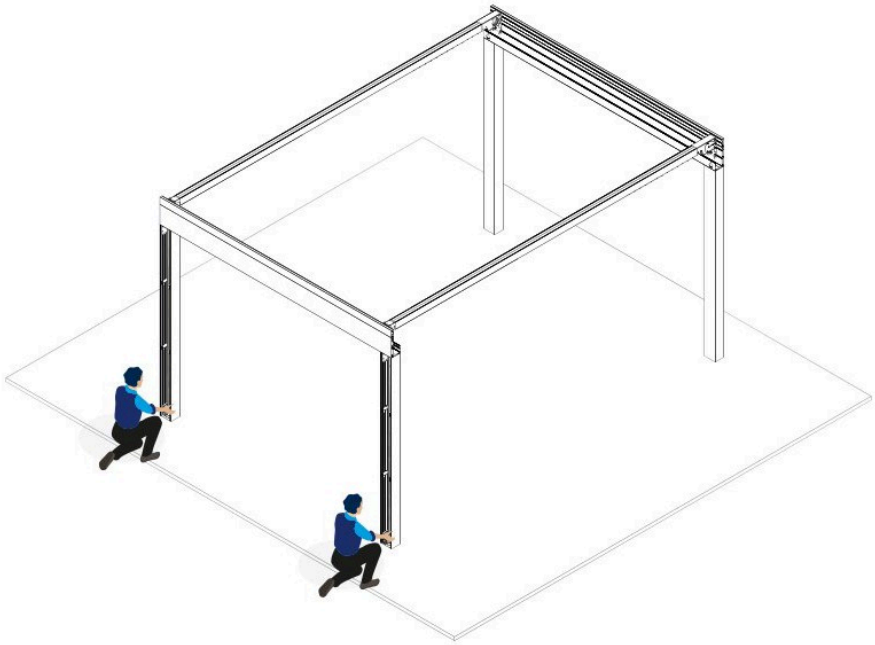

Step 1.9

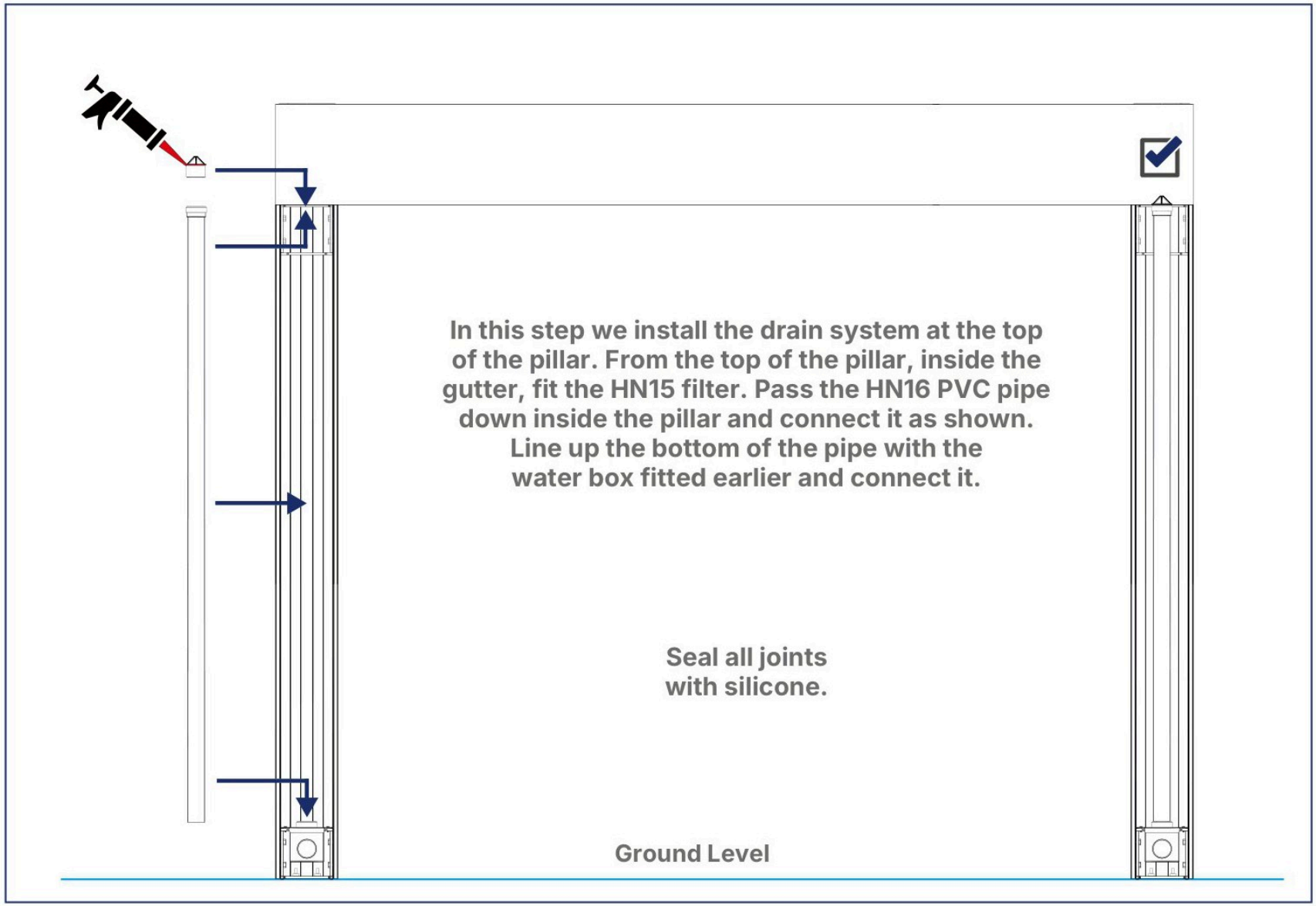
In this step we install the drain system at the top of the pillar. From the top of the pillar, inside the gutter, fit the HN15 filter. Pass the HN16 PVC pipe down inside the pillar and connect it as shown. Line up the bottom of the pipe with the water box fitted earlier and connect it.
Seal all joints with silicone.
Ground Level

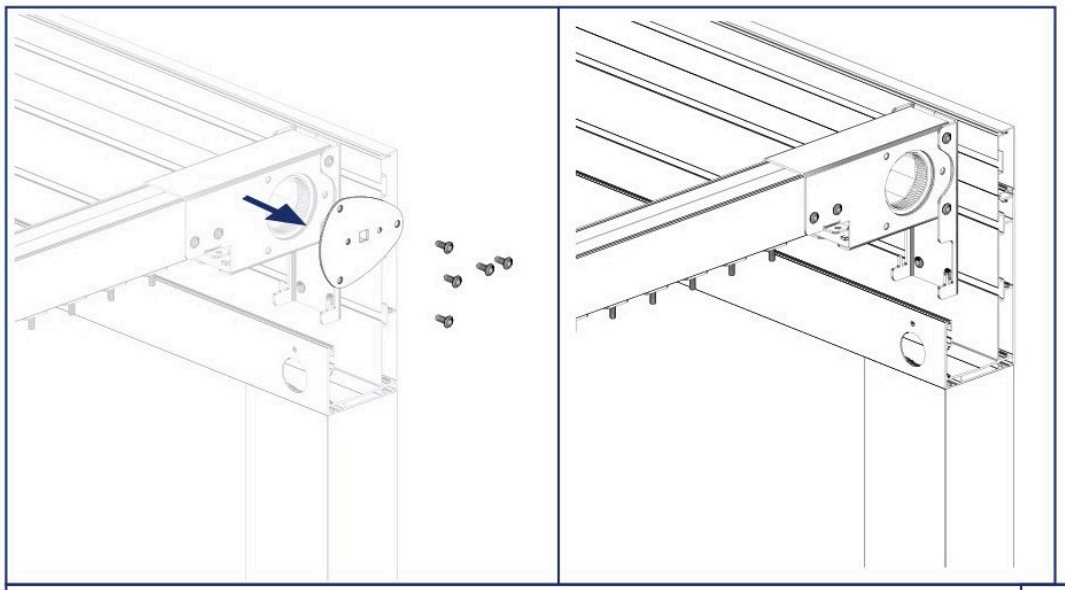

In this step we fit the motor tube. First remove the rail side cover, which ships fitted, with its screws. The motor tube ships in short pieces. Join them with the motor tube joining bracket shown below.

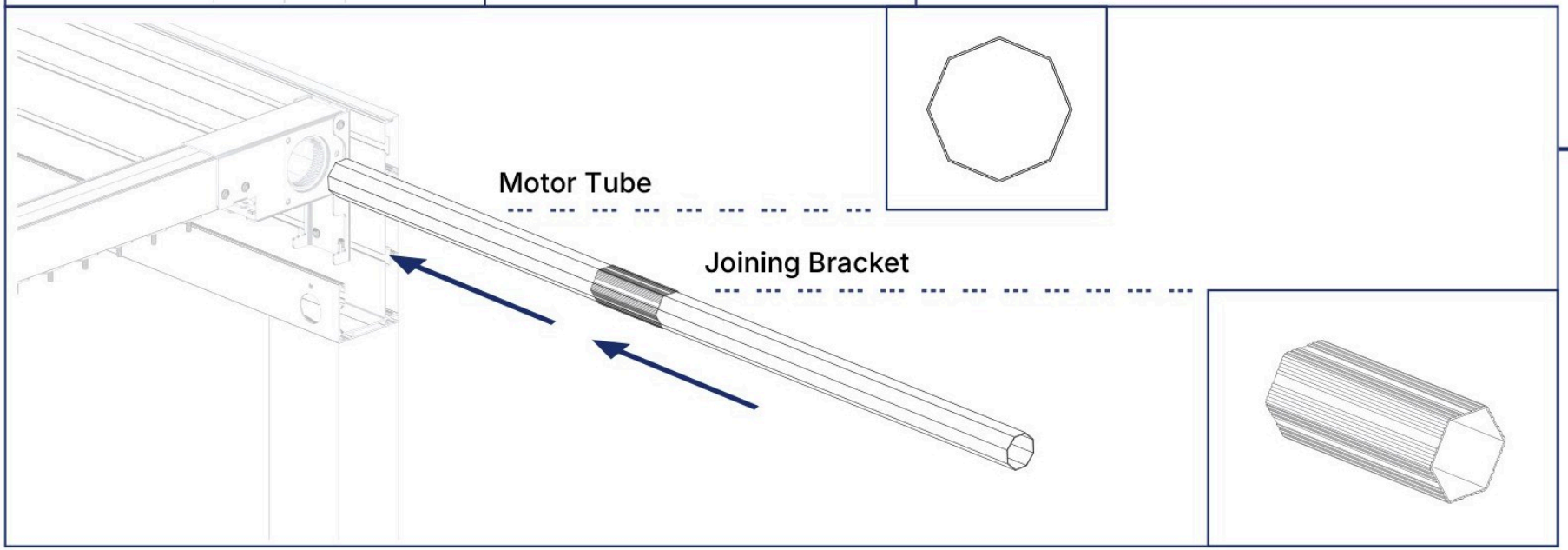

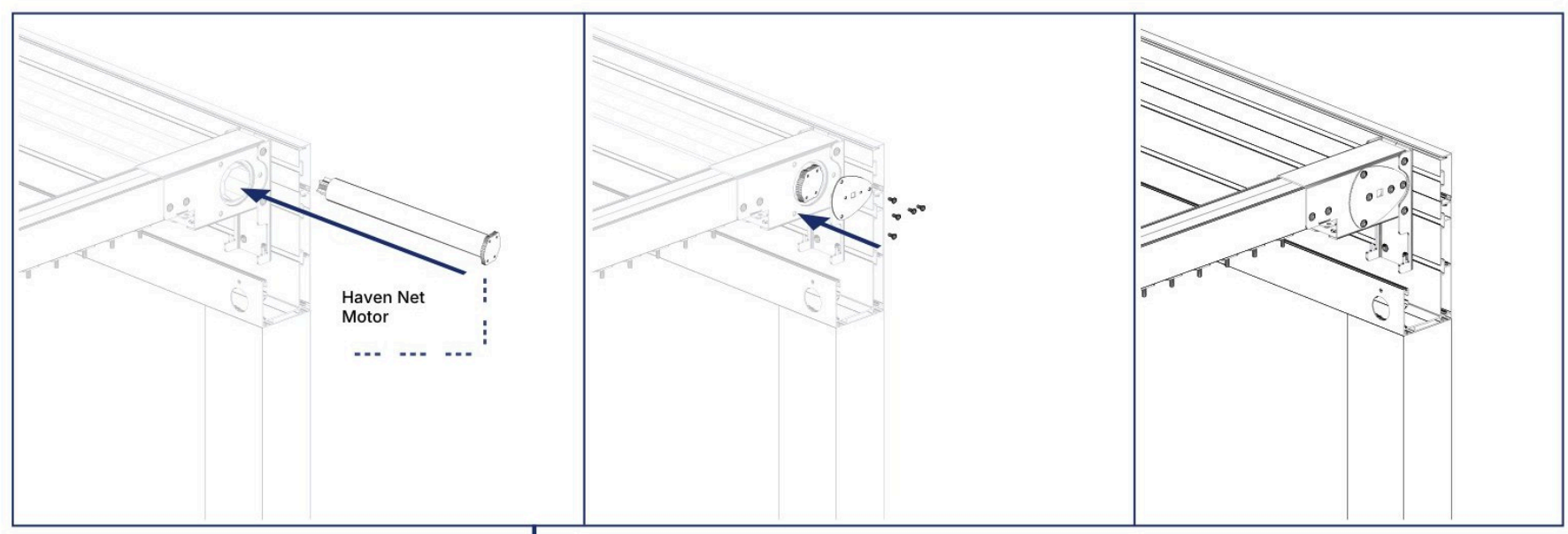

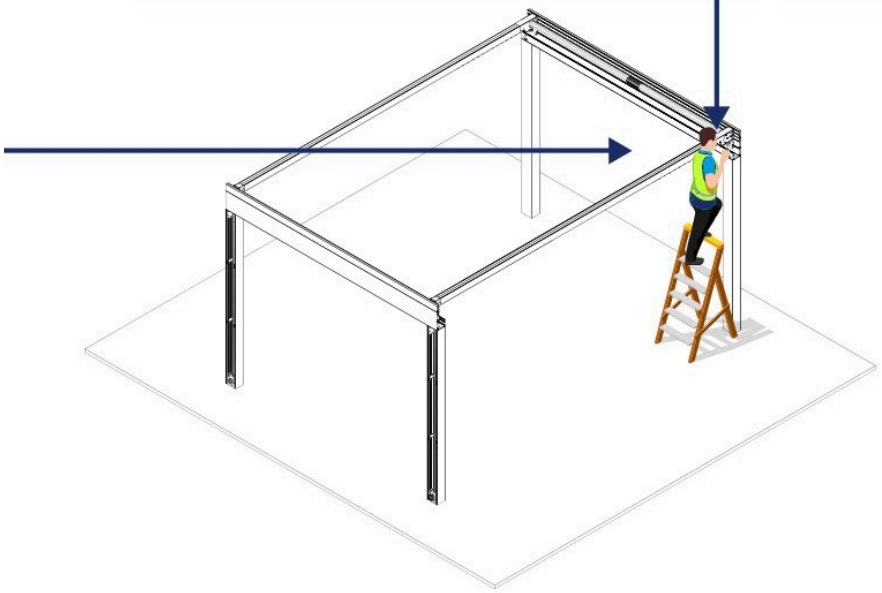

Slide the system motor into the motor tube fitted in the previous step, as shown in the pictures above. Then refit the rail side covers you removed.

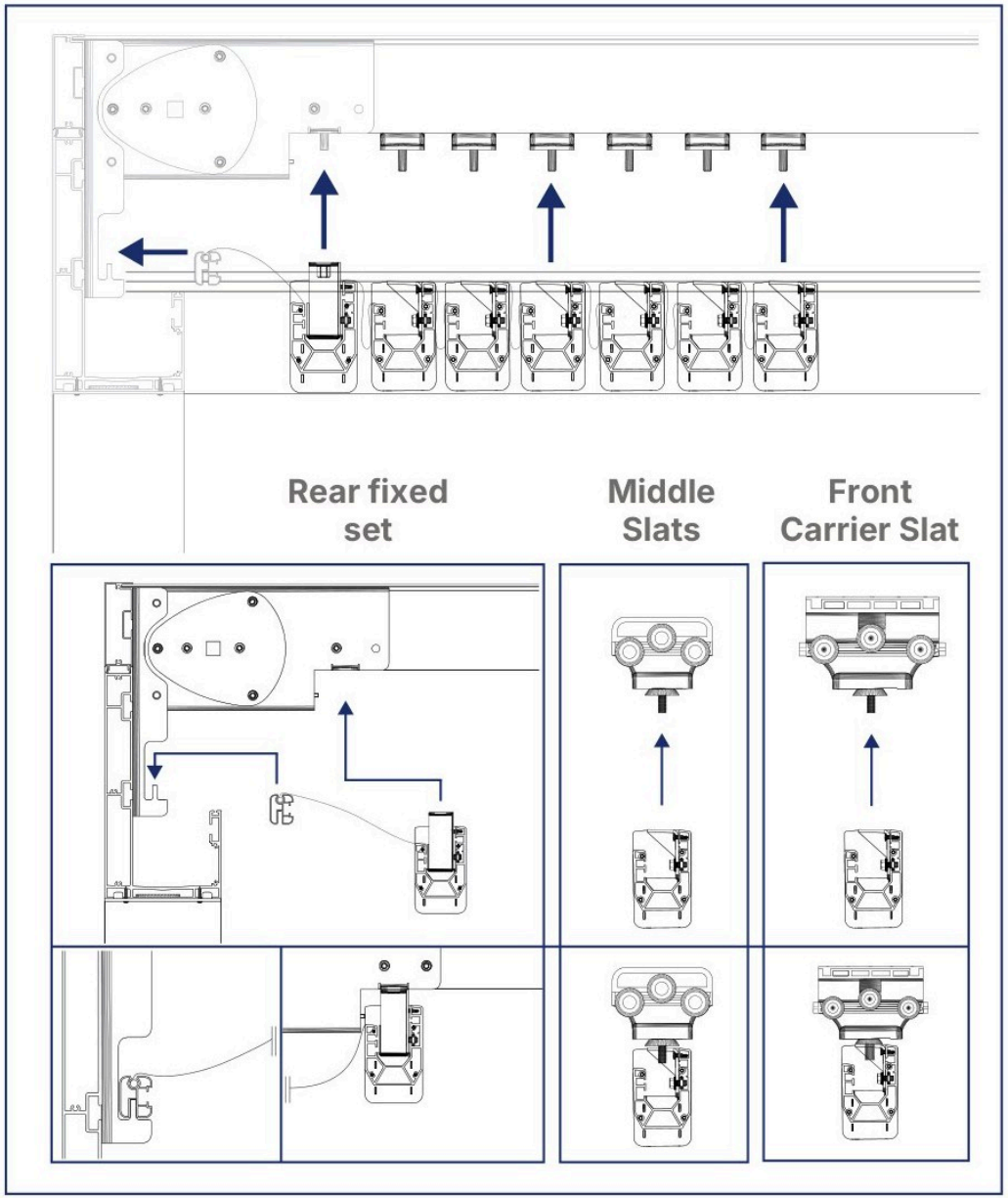

In this step we install the HN70 fabric set. Line up each slat type with its cars on the rail, as shown on the left.

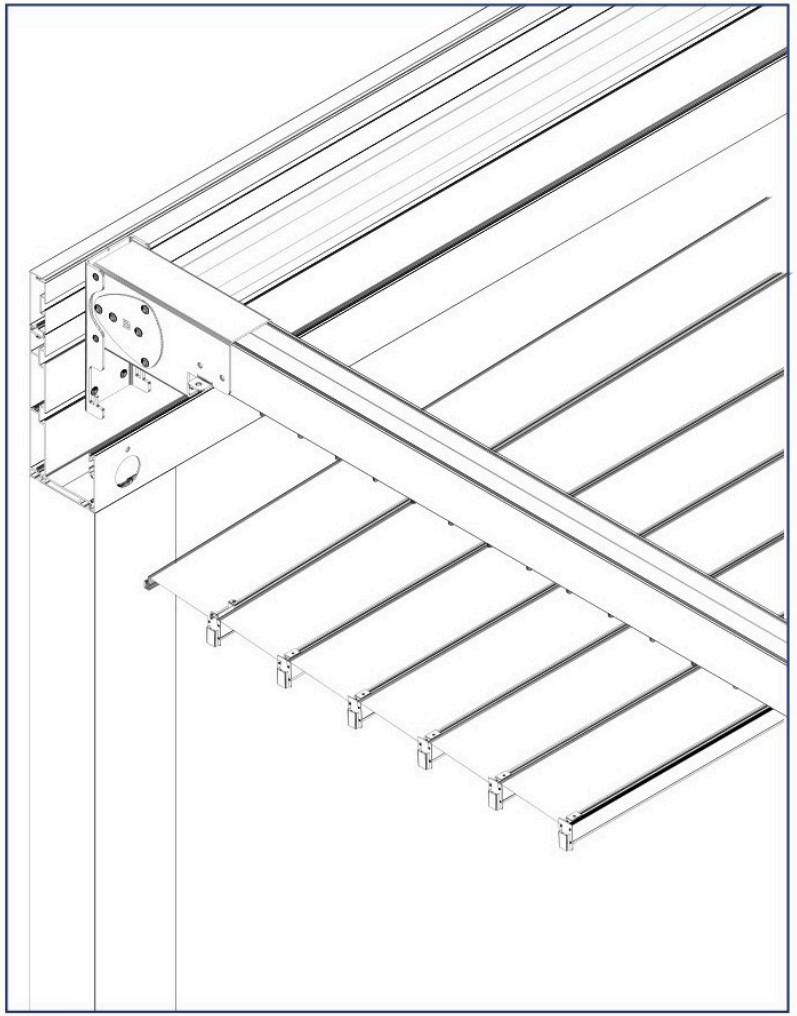

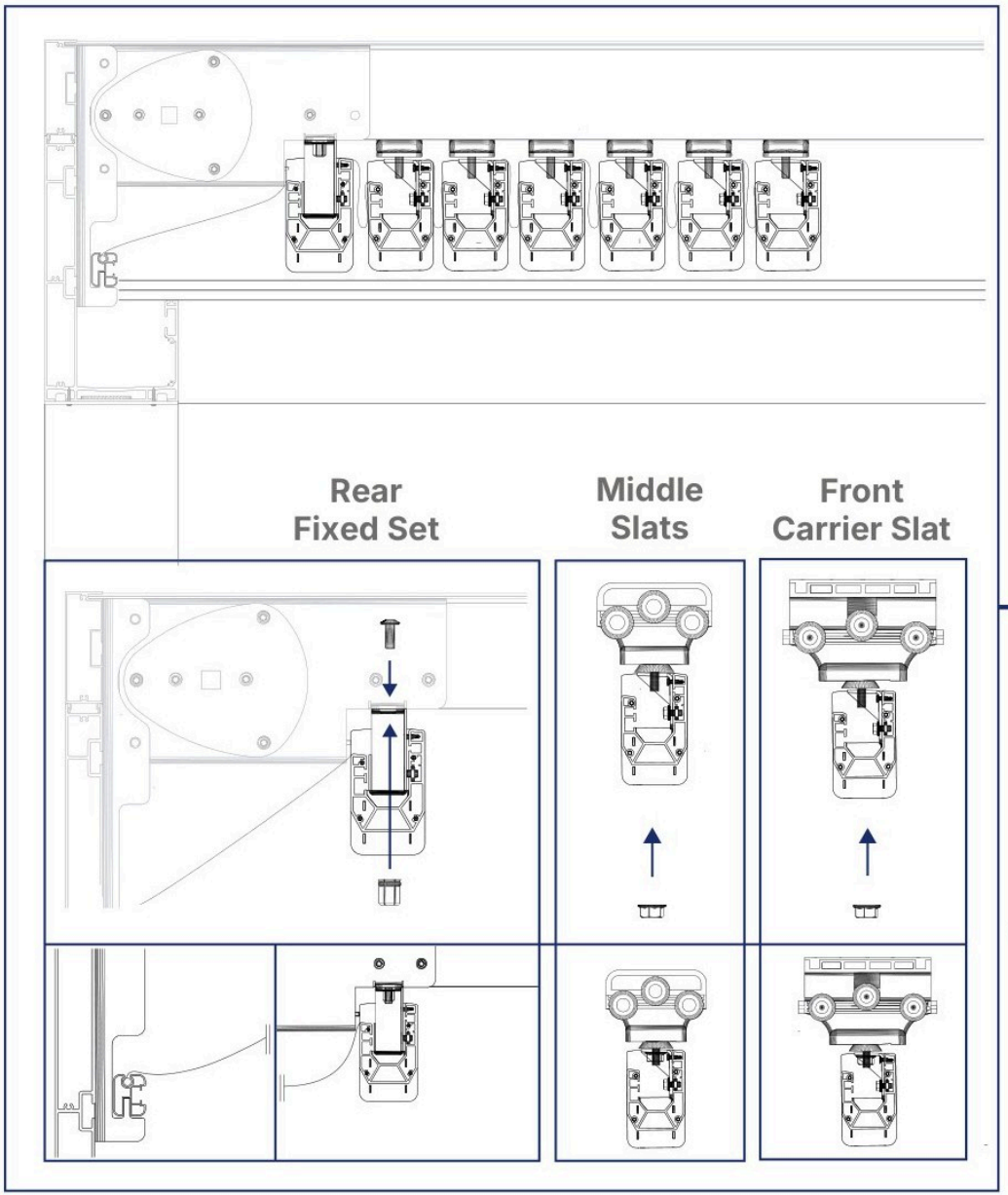

After the clip-on step is completed correctly, finish the assembly with the HN74 slat nut.

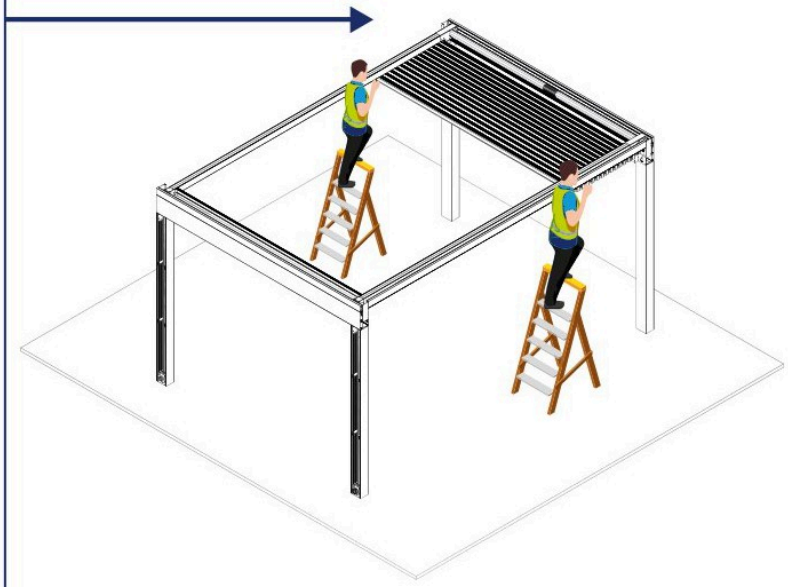

In this step we screw the HN101 LED profile holders to all gutters of the system every 1 metre.

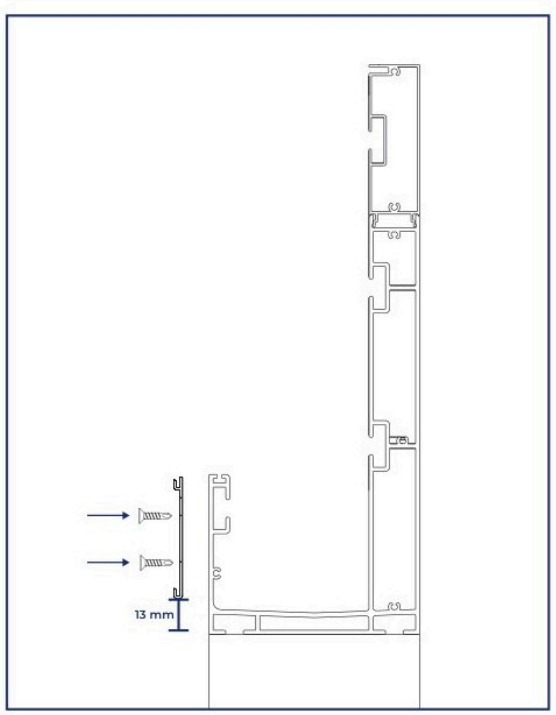

Side Gutters

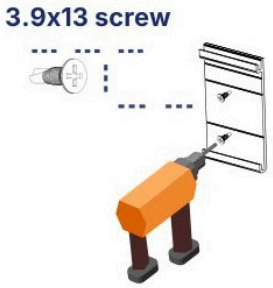

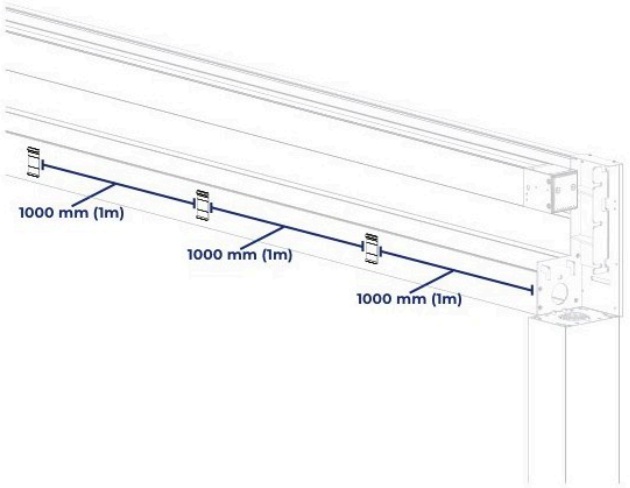

Front/Back Gutters

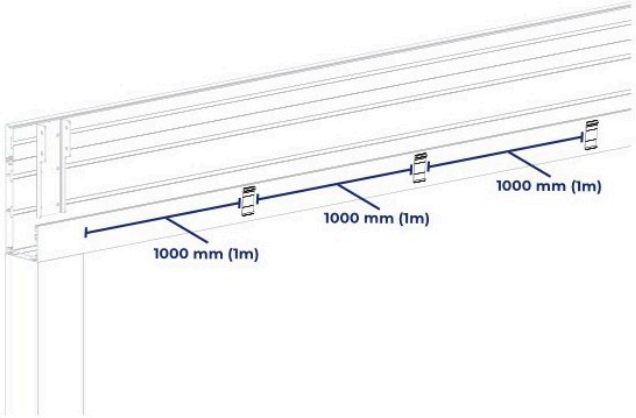



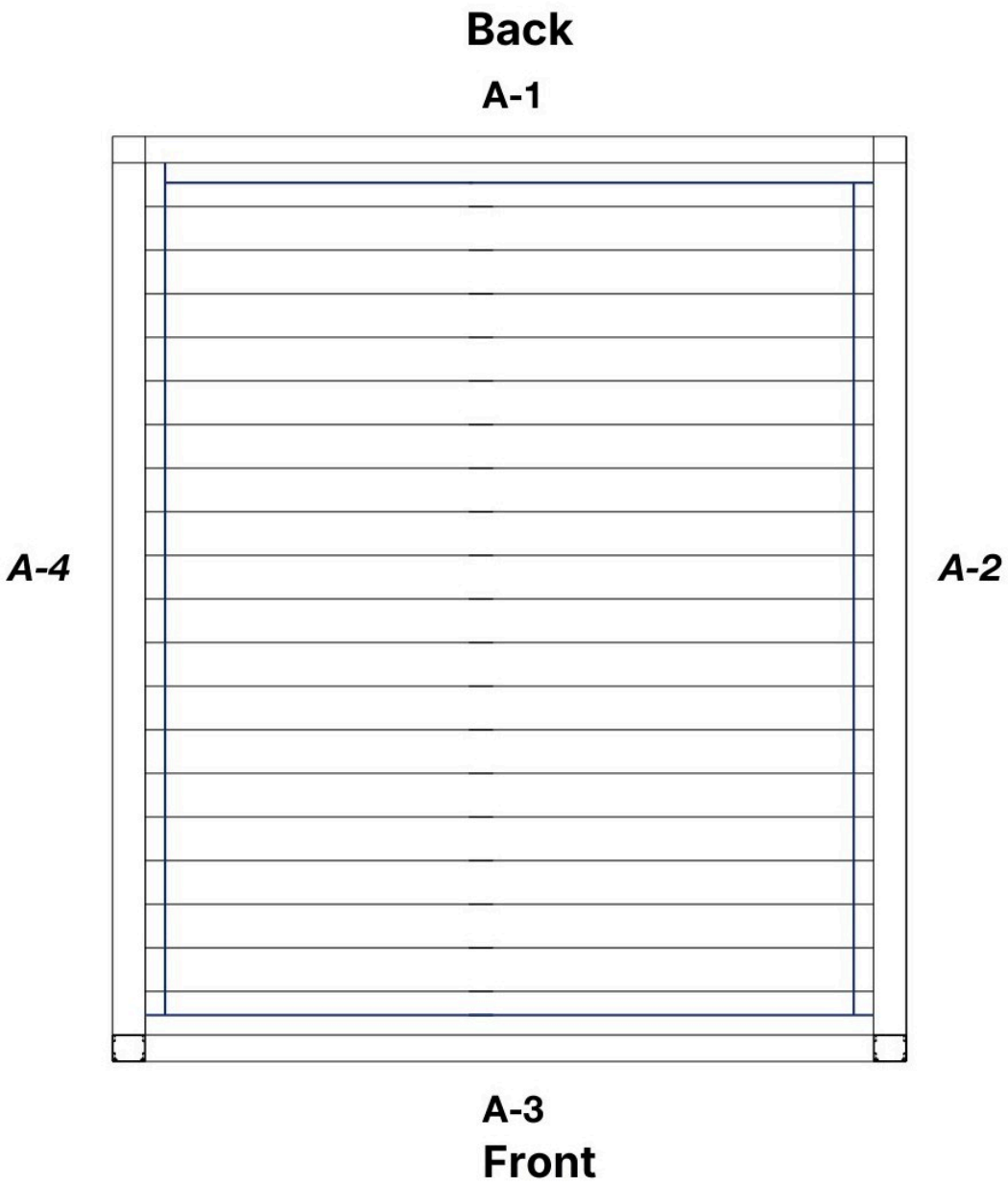

Project Lighting Layout Plan

In this step, check the LED profile layout. Profiles are numbered A-1 to A-4 when shipped. Larger 2- and 3-bay systems use B-1 and C-1 codes the same way. Before mounting, check that all profiles line up on flat ground.

In this step we clip the HN102 LED profiles into the HN101 holders fitted earlier, checking each order code.

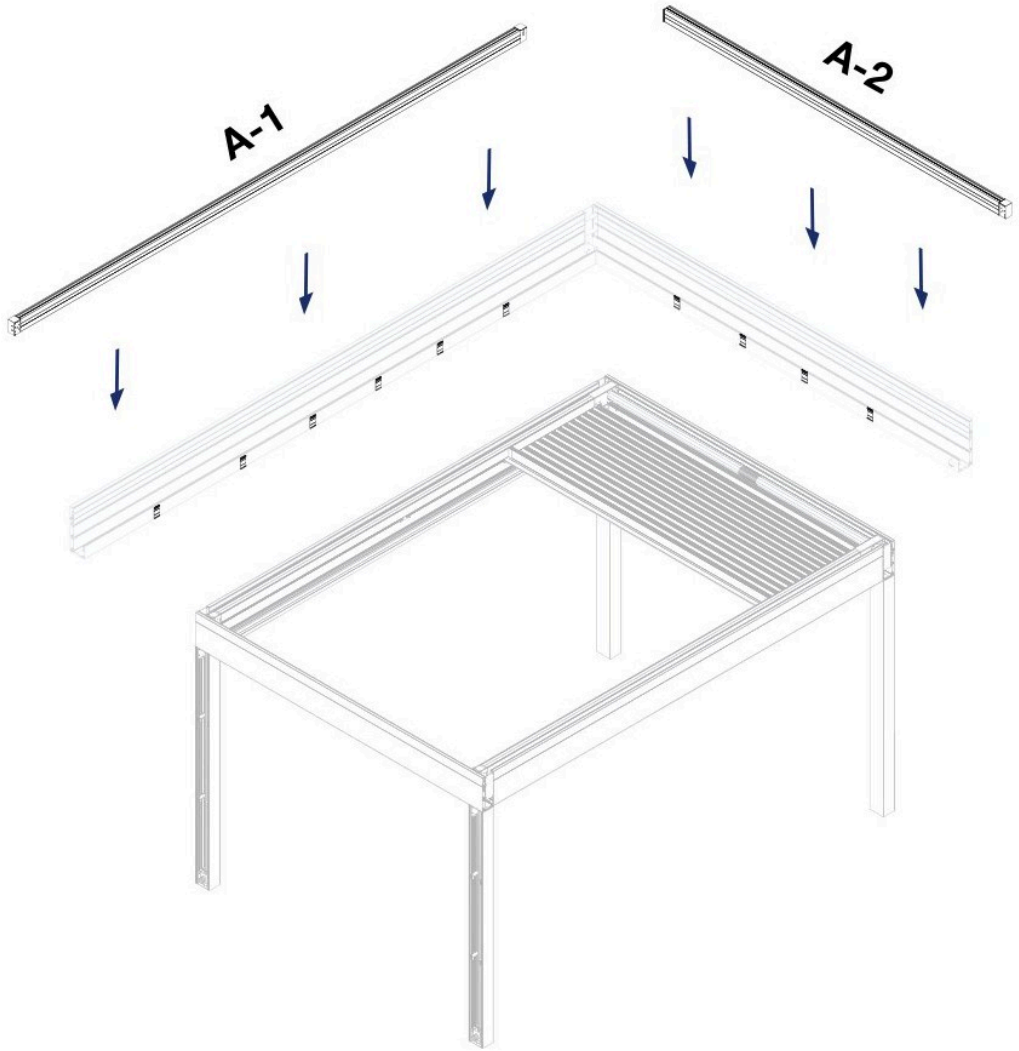

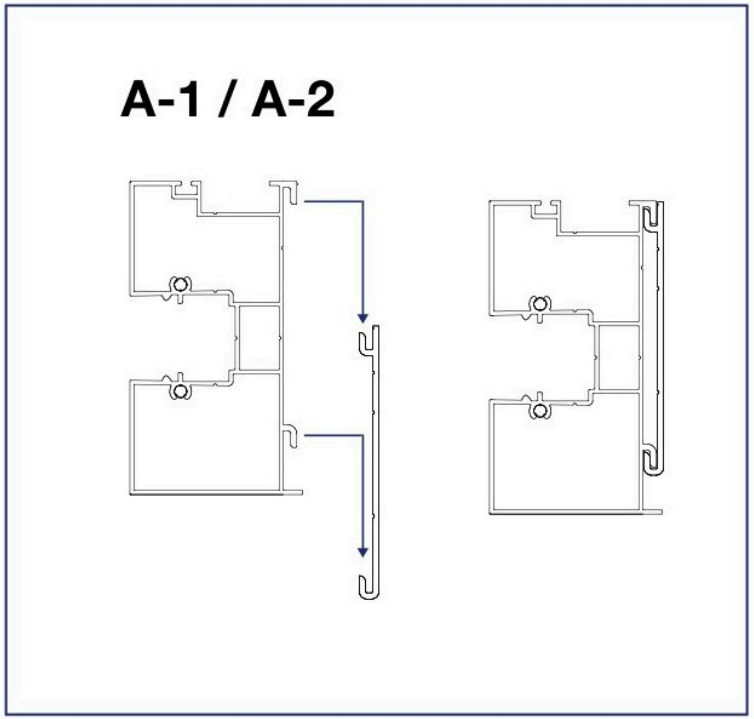

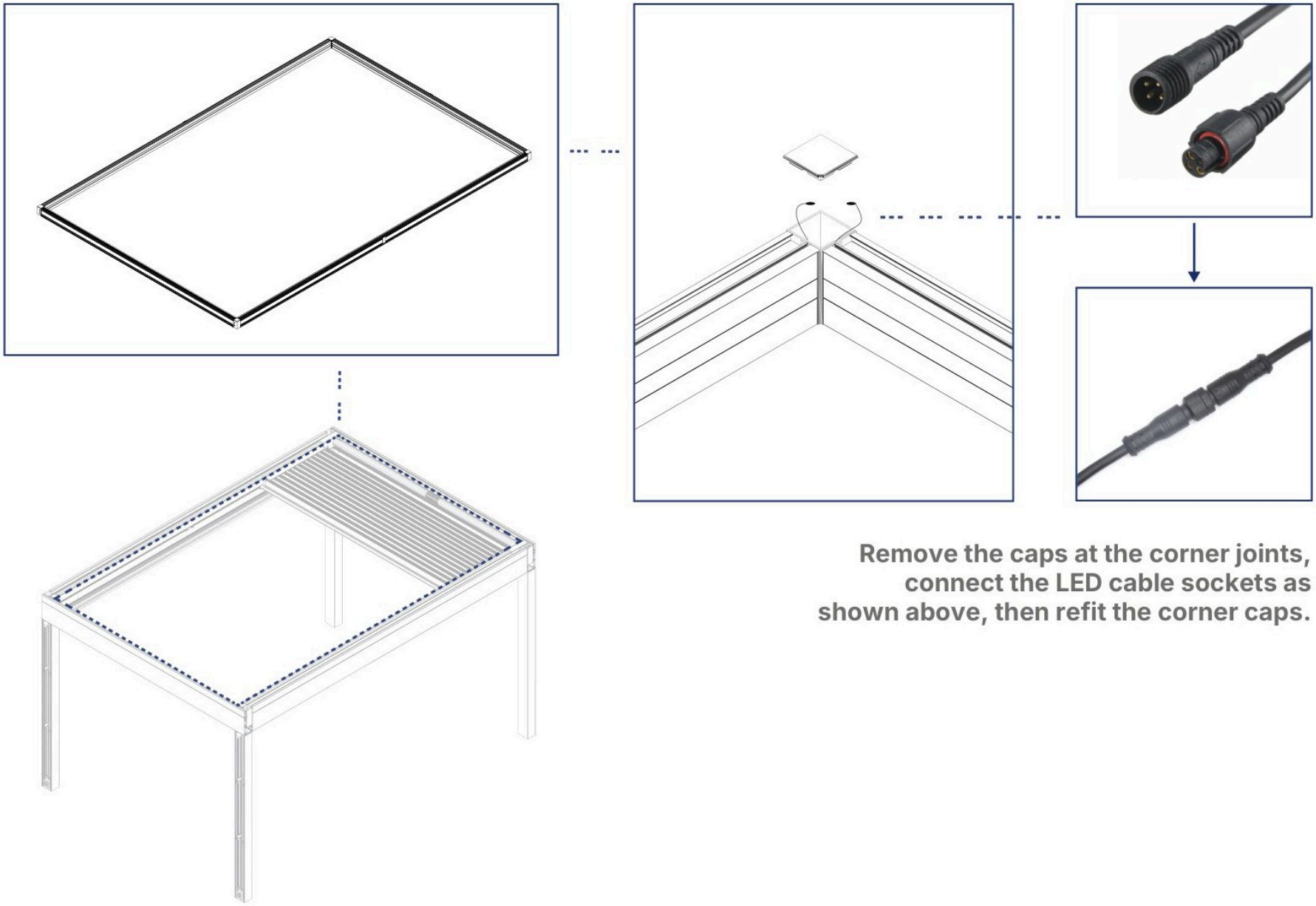

Remove the caps at the corner joints, connect the LED cable sockets as shown above, then refit the corner caps.

Step 4.1

When the electrical work is done, bring the motor power cable out as shown on the right, to connect it to the local power supply.

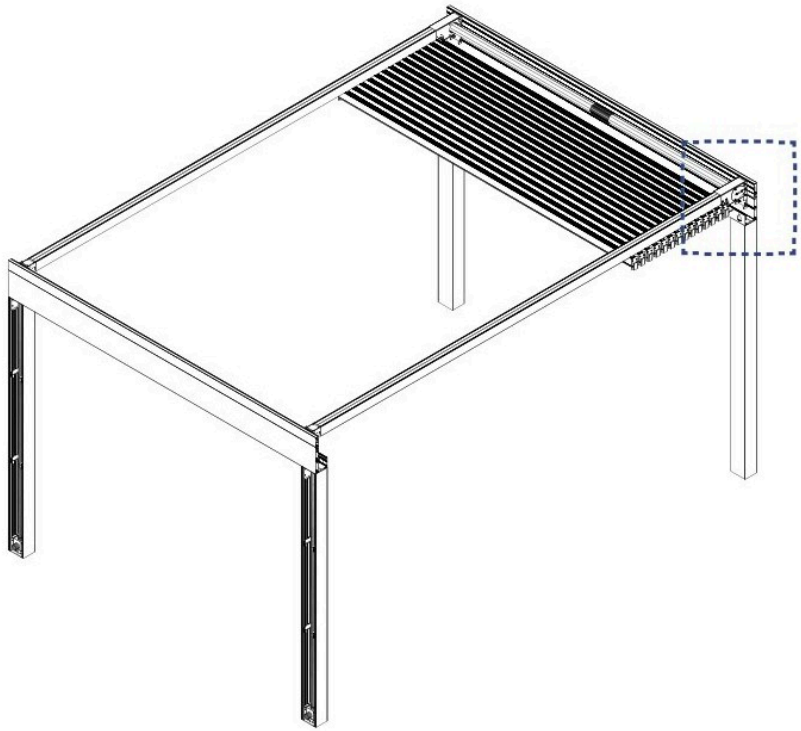

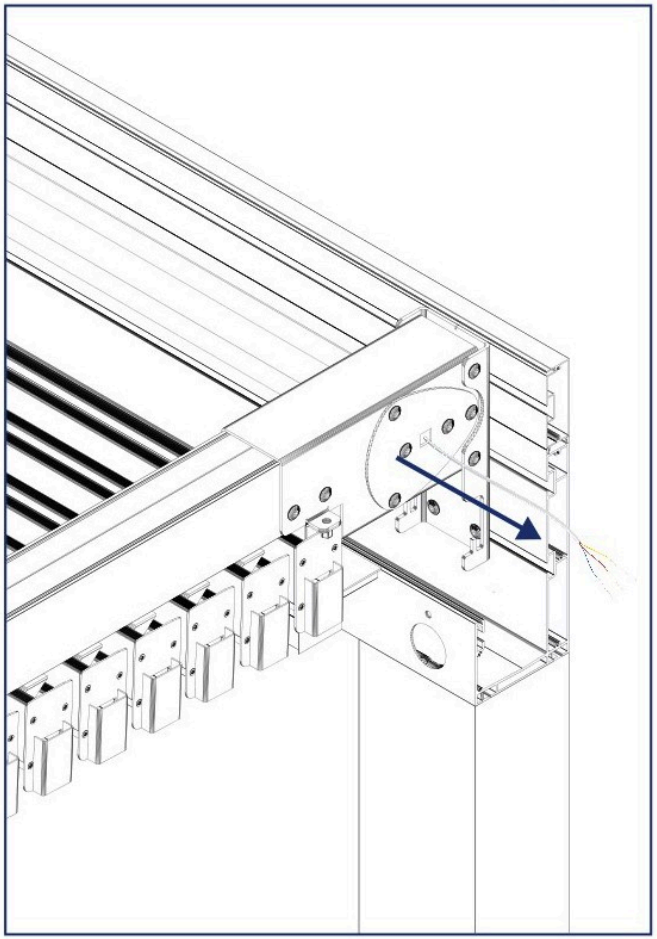

Step 4.2

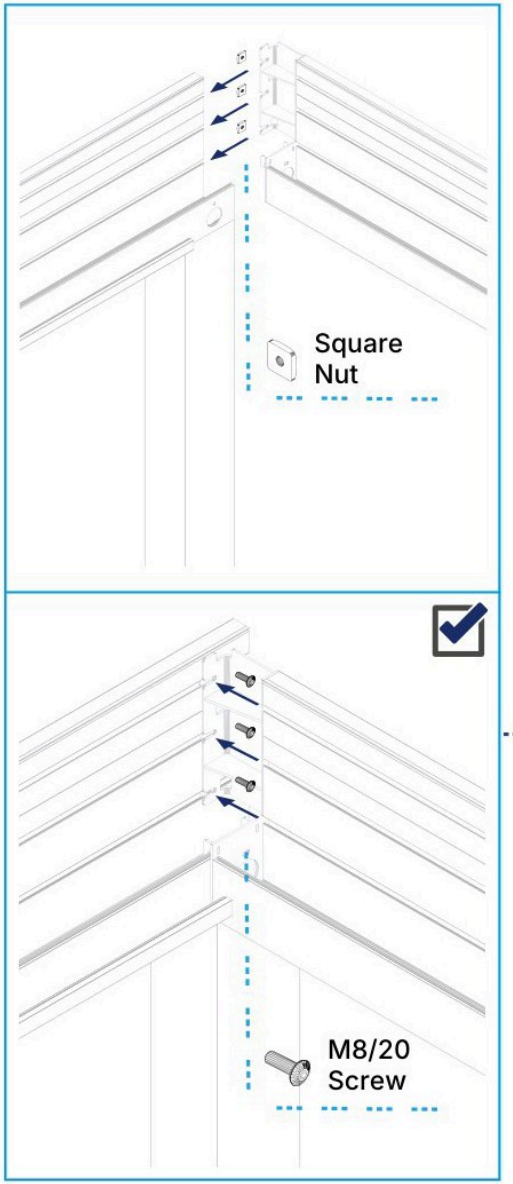

After the motor and fabric are installed, we fit the HN41 side gutters, the main carrying members of the system, on the outside of the rails as shown. First put the nuts into the nut channels on the gutter. Set the side gutter in place, then tighten the screws into the nuts.

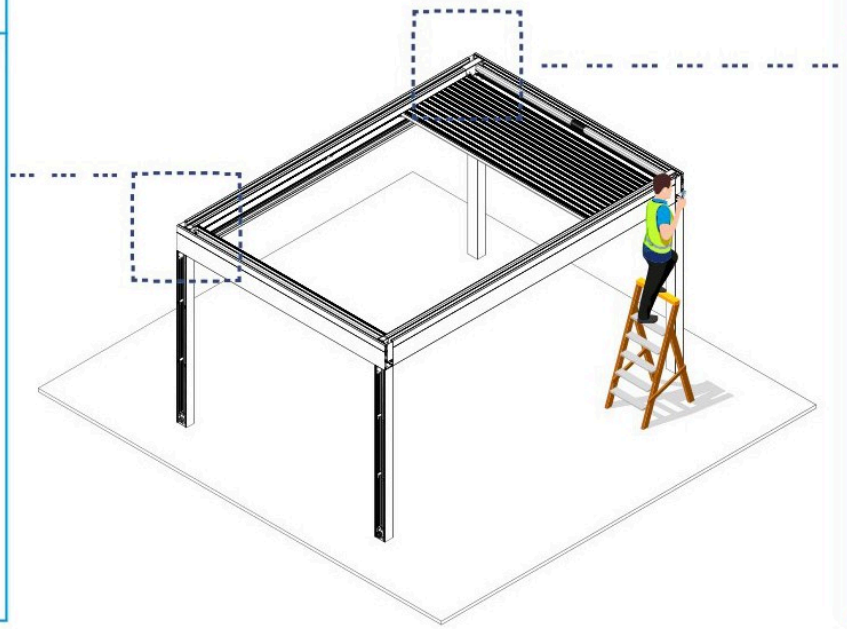

Step 4.3

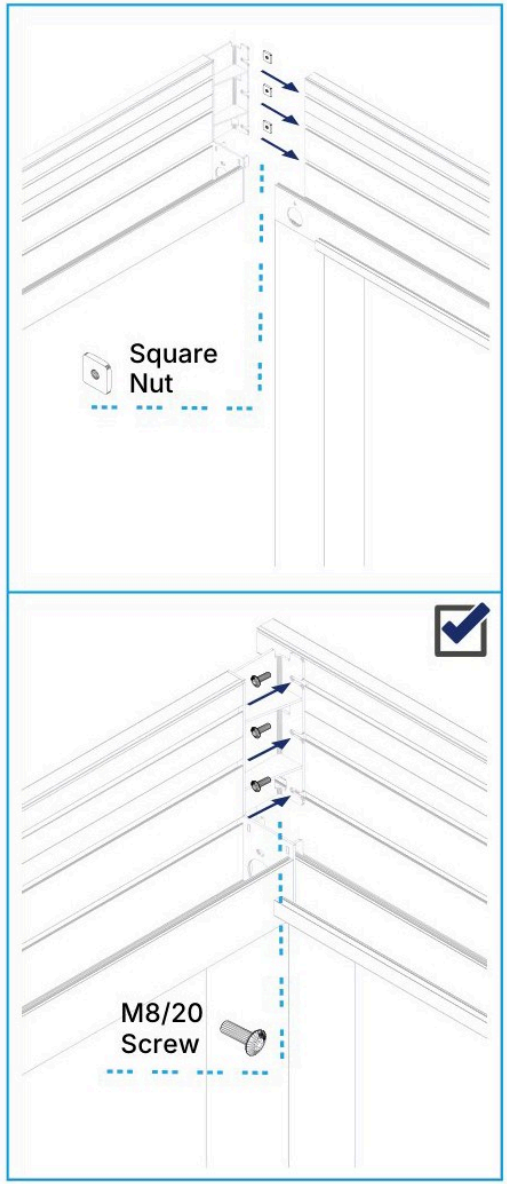

Step 4.4

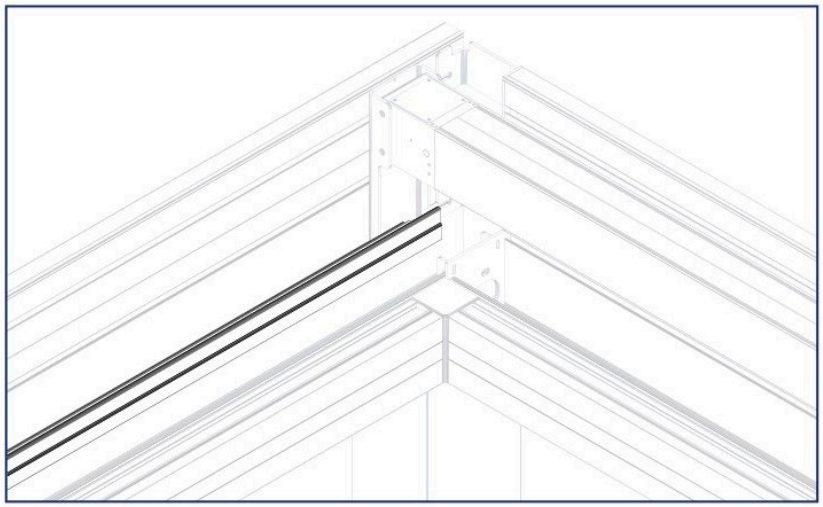

In this step we fit the HN62 gutter front closing profile. Set it inside the front gutter profile as shown and screw it every 1 metre.

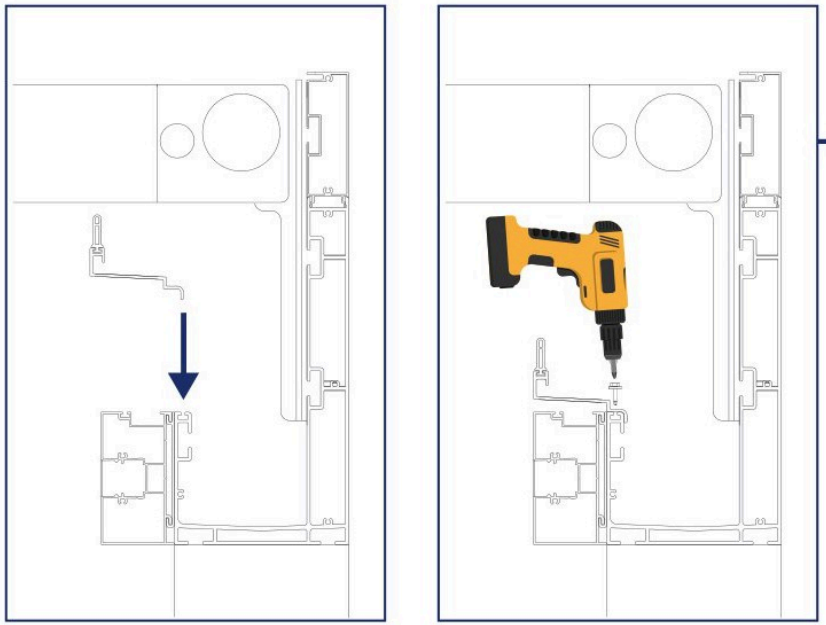

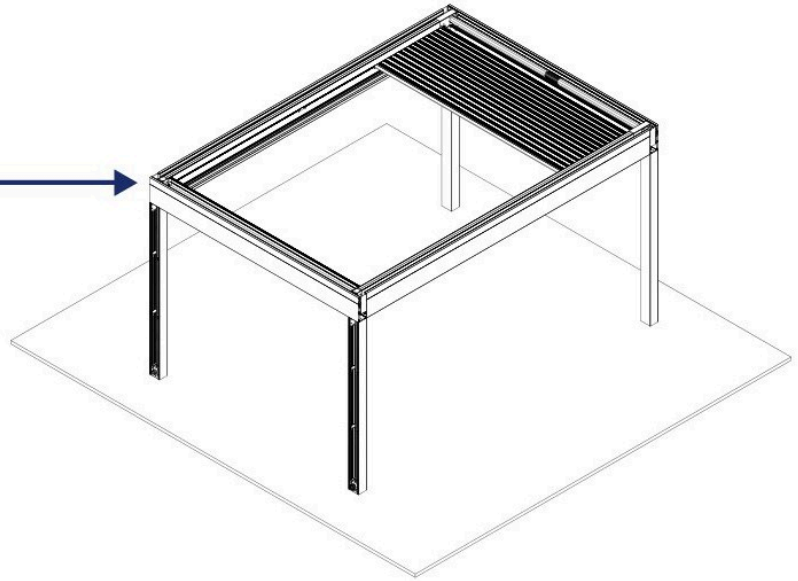

Step 4.5

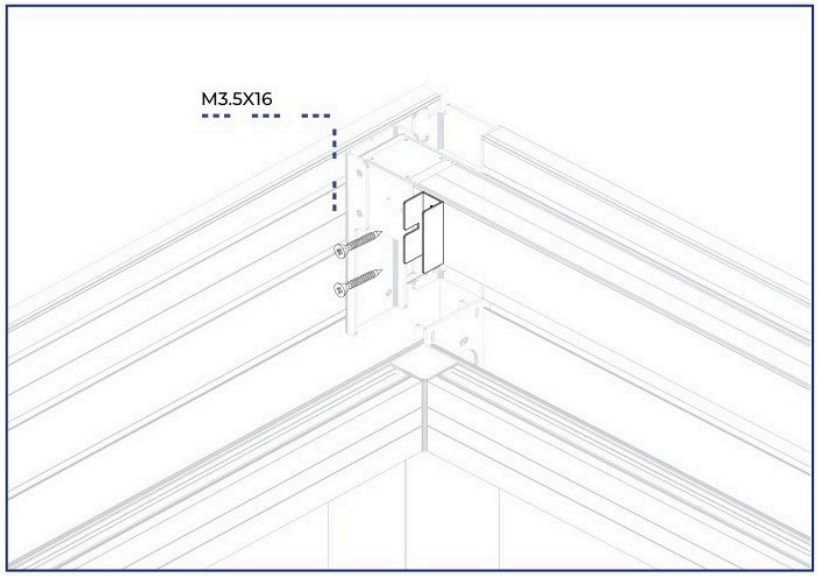

In this step we first fix the HN81 traverse holder at the front of the system, between each pair of rails. Then seat the HN82 profile in the holder and fix it with the screw and nut.

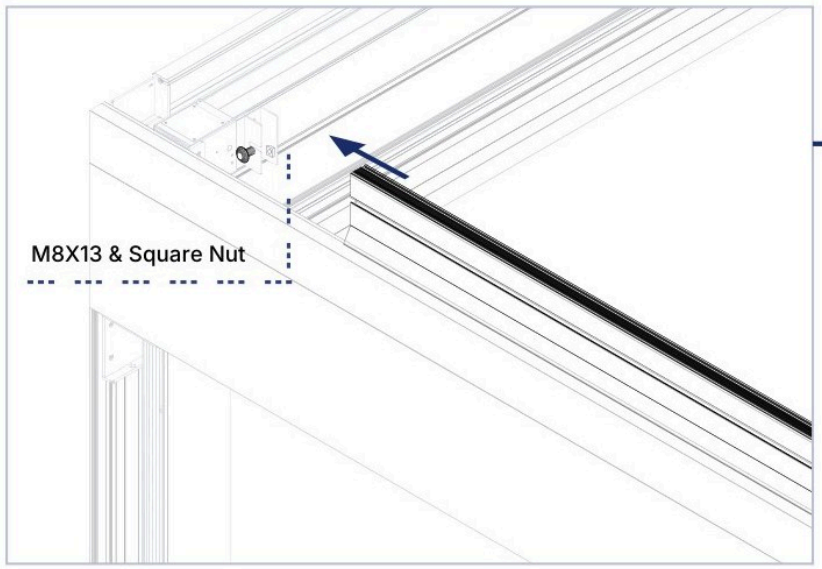

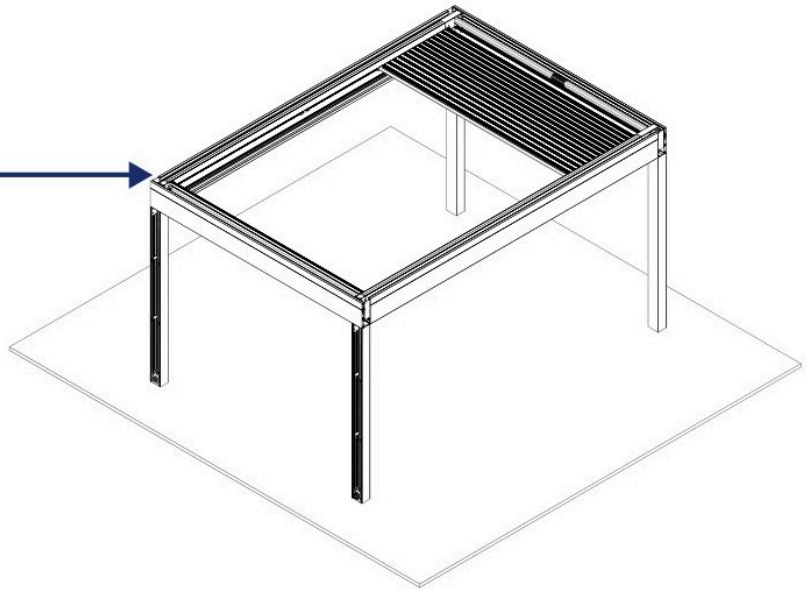

Step 4.6

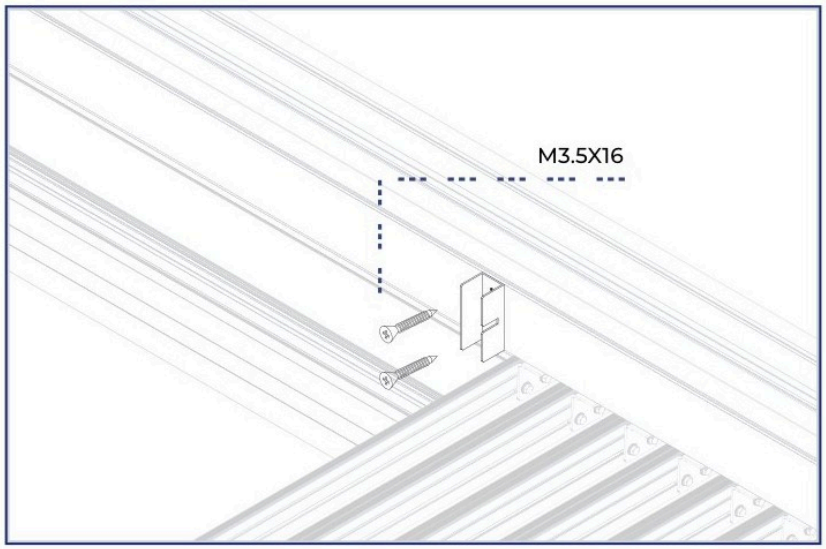

As in the previous step, first fix the HN81 traverse holder at the middle of the system, between each pair of rails. Then seat the HN82 profile in the holder and fix it with the screw and nut.

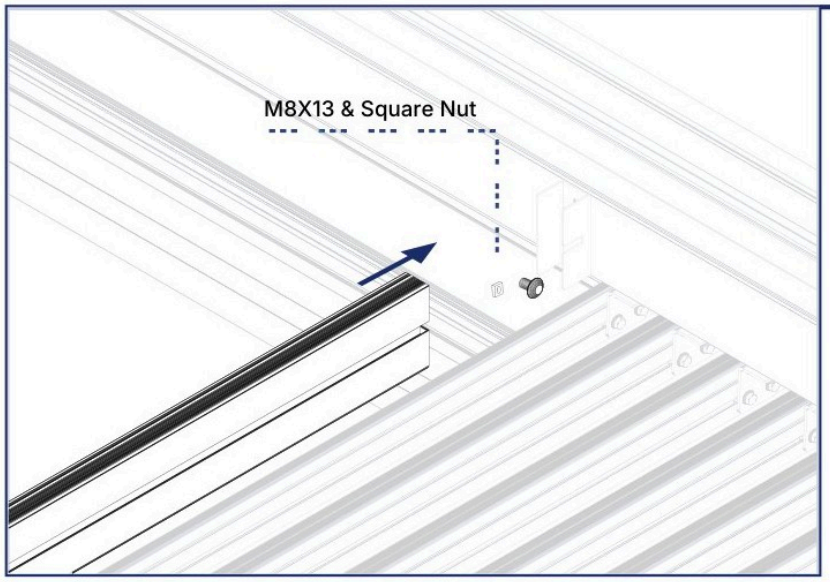

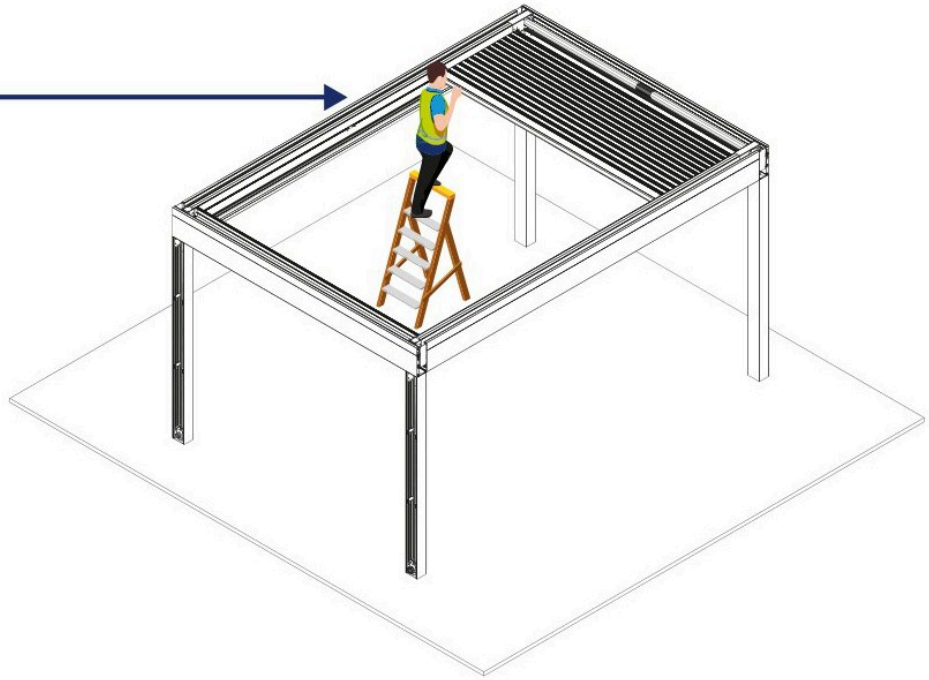

Step 5.1

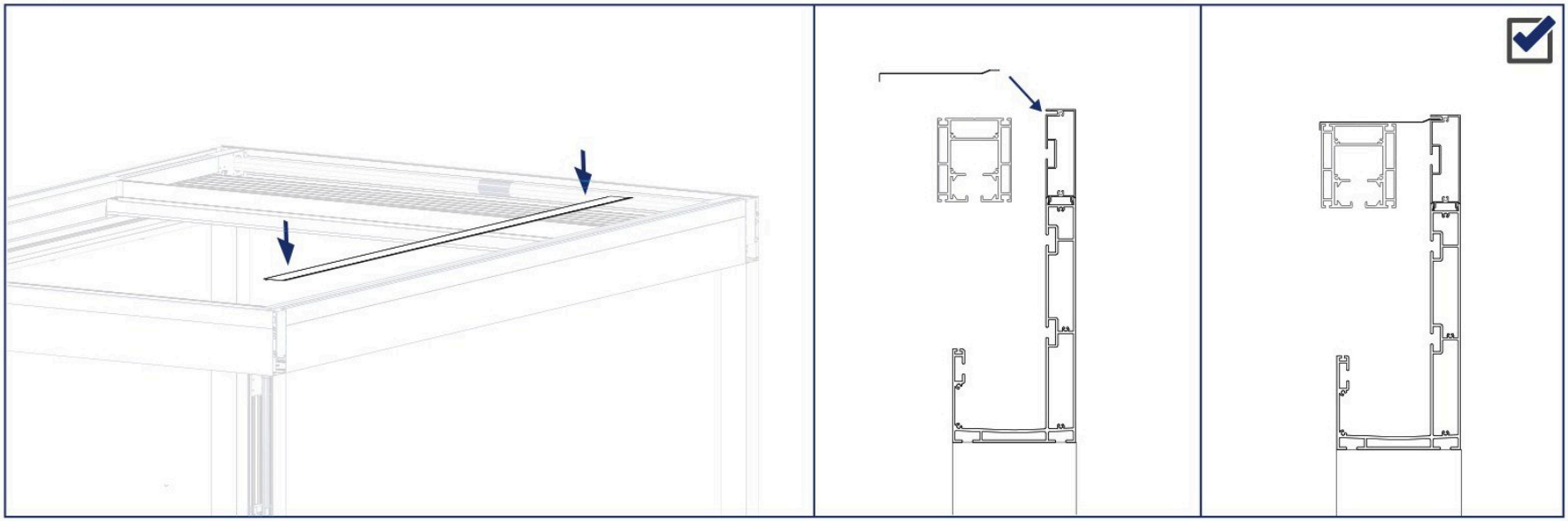



With all main parts installed, we start step 5, the last one: the cover profiles. First clip the HN61 rail top cover on so it locks to the gutter, as shown above, and screw it at a few points.

Step 5.2

In this step we fix the HN92 front roof sheet on top of the system, as shown below.

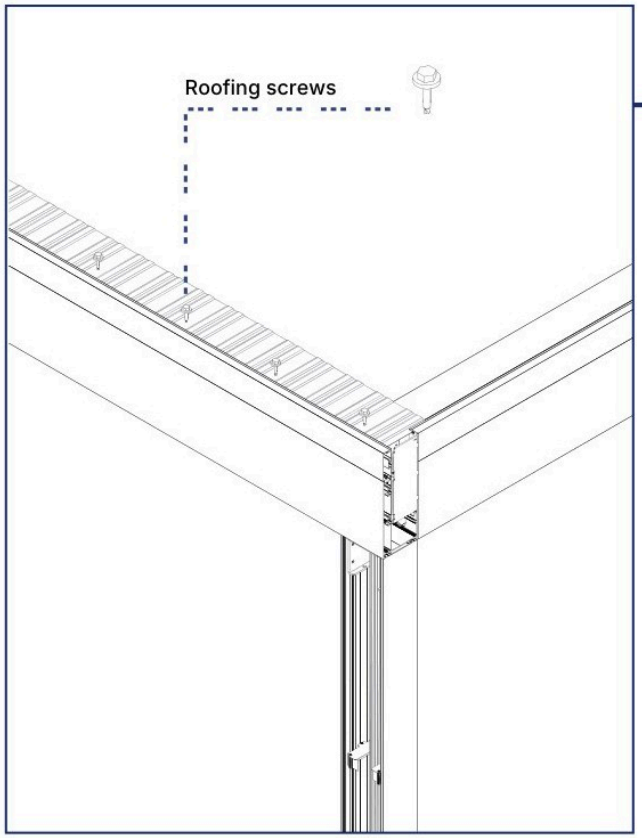

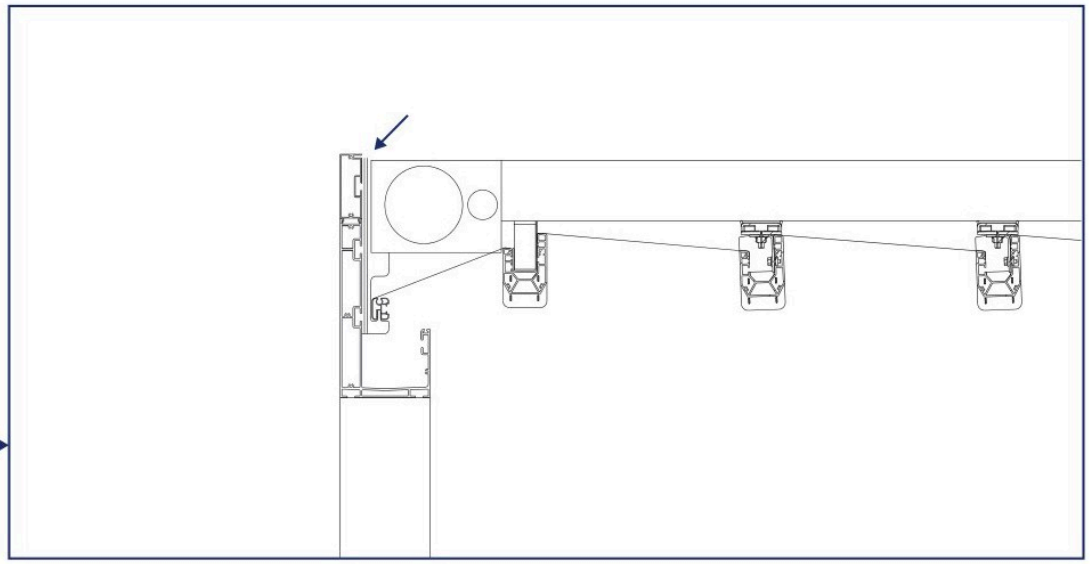

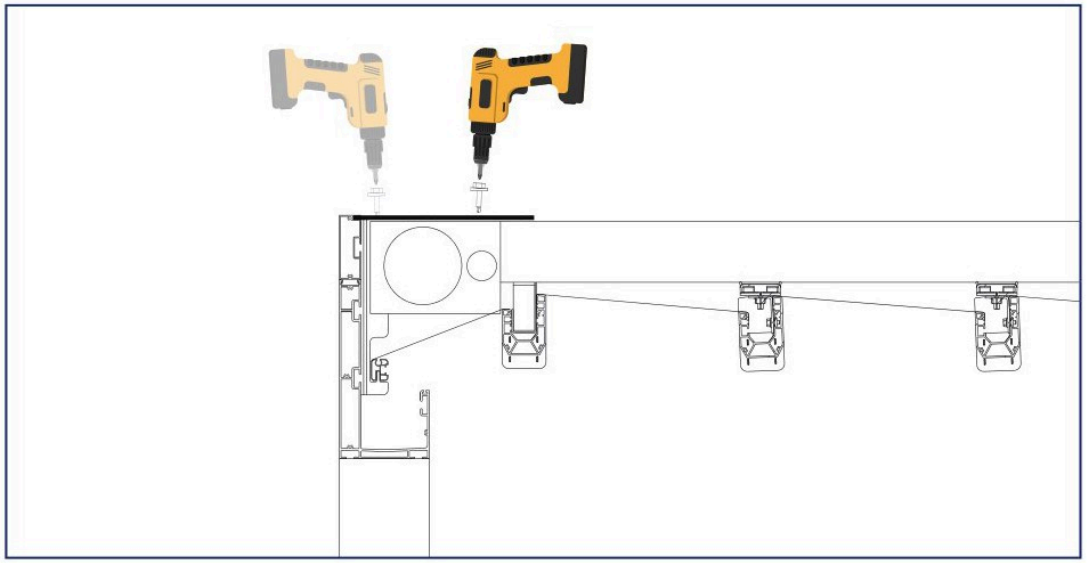

Step 5.3

In this step we fix the HN91 back roof sheet on top of the system, as shown below.

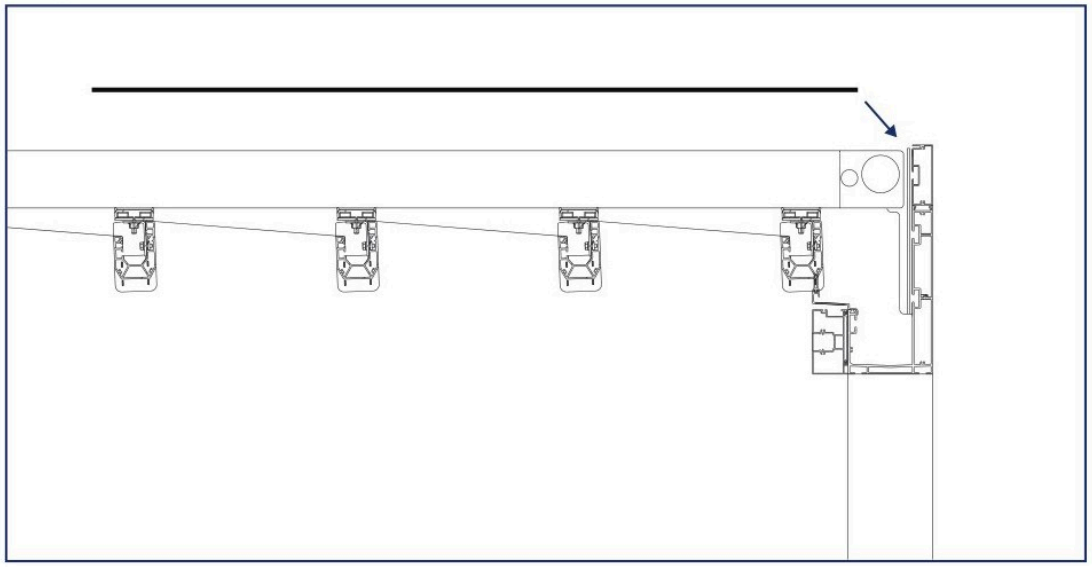

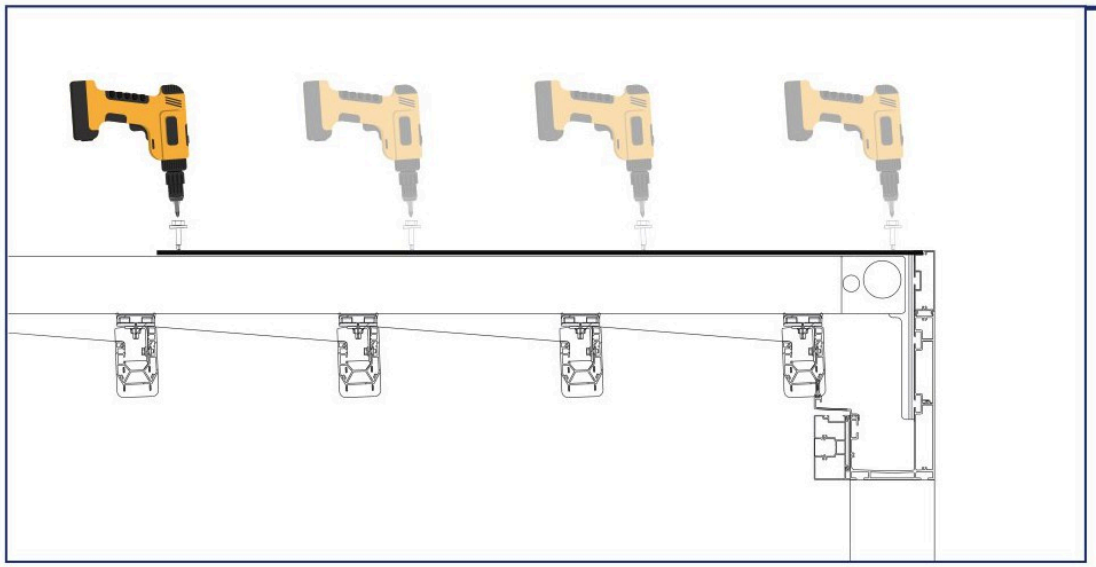

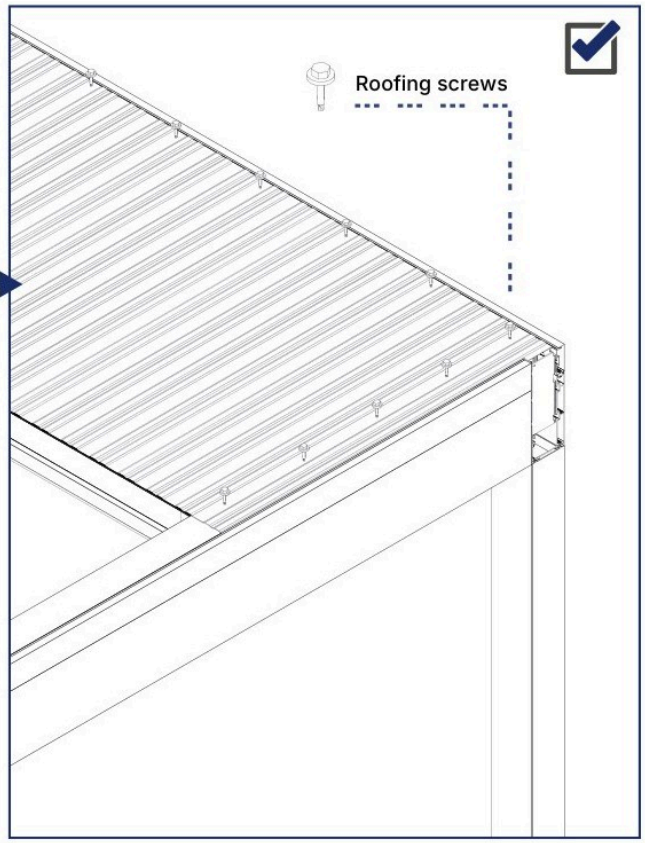

Step 5.4

In this step we fit the HN12 side caps of the system, as shown in the pictures.

! If the power cable exits through a side cap, drill the cable hole in the cap on the same side as the motor.

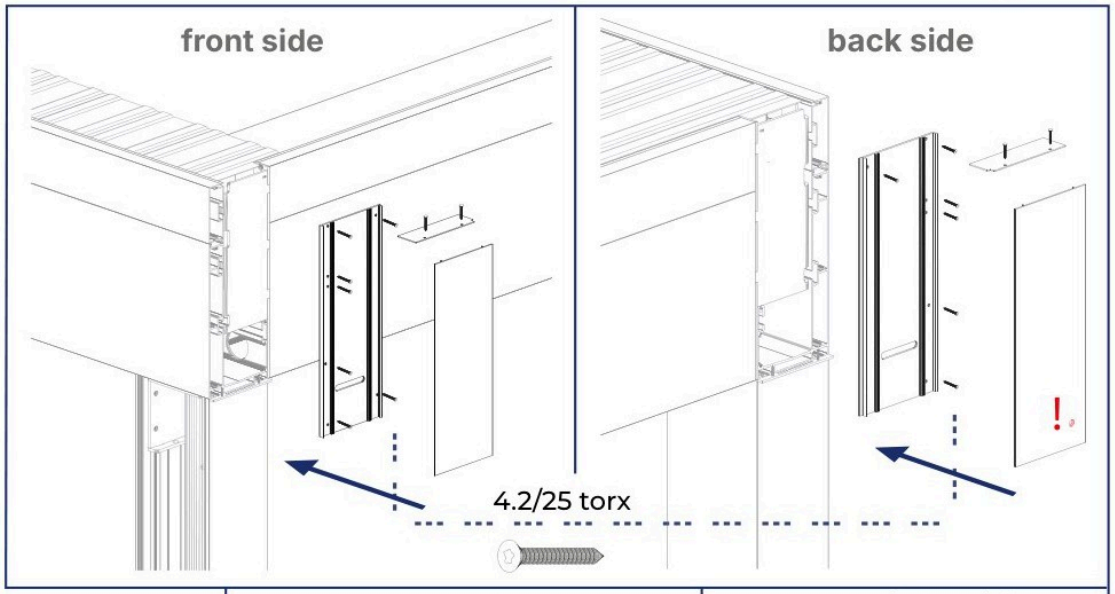

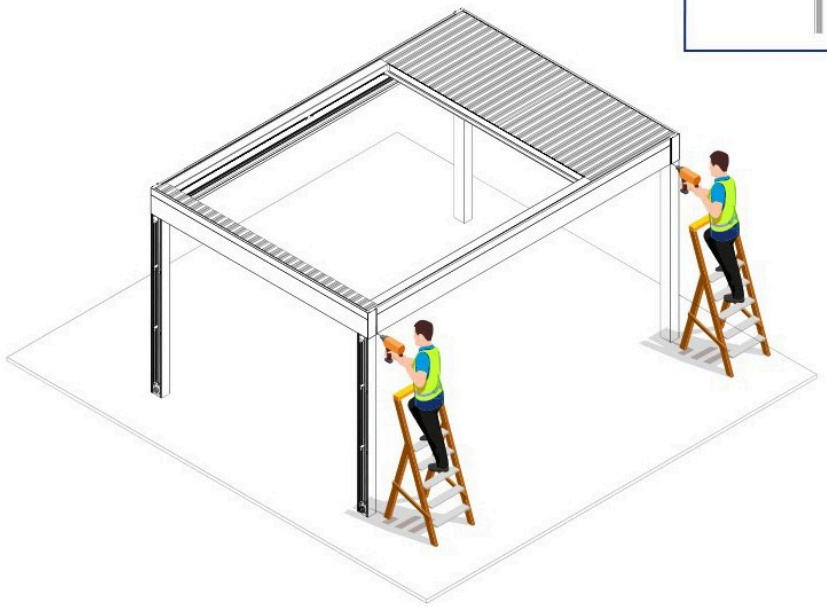

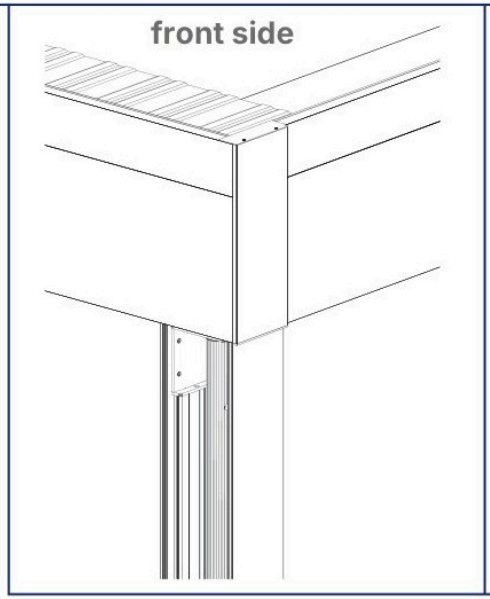

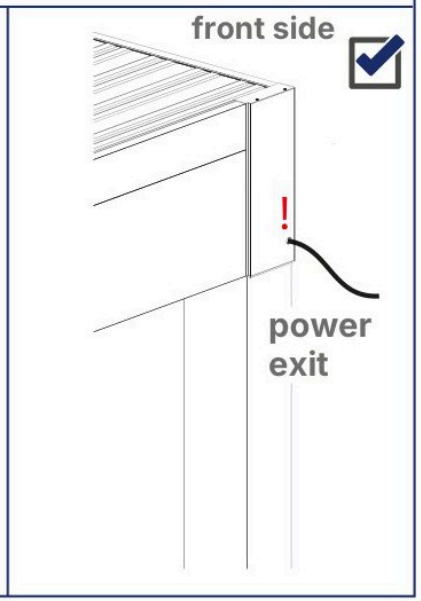

Step 5.5

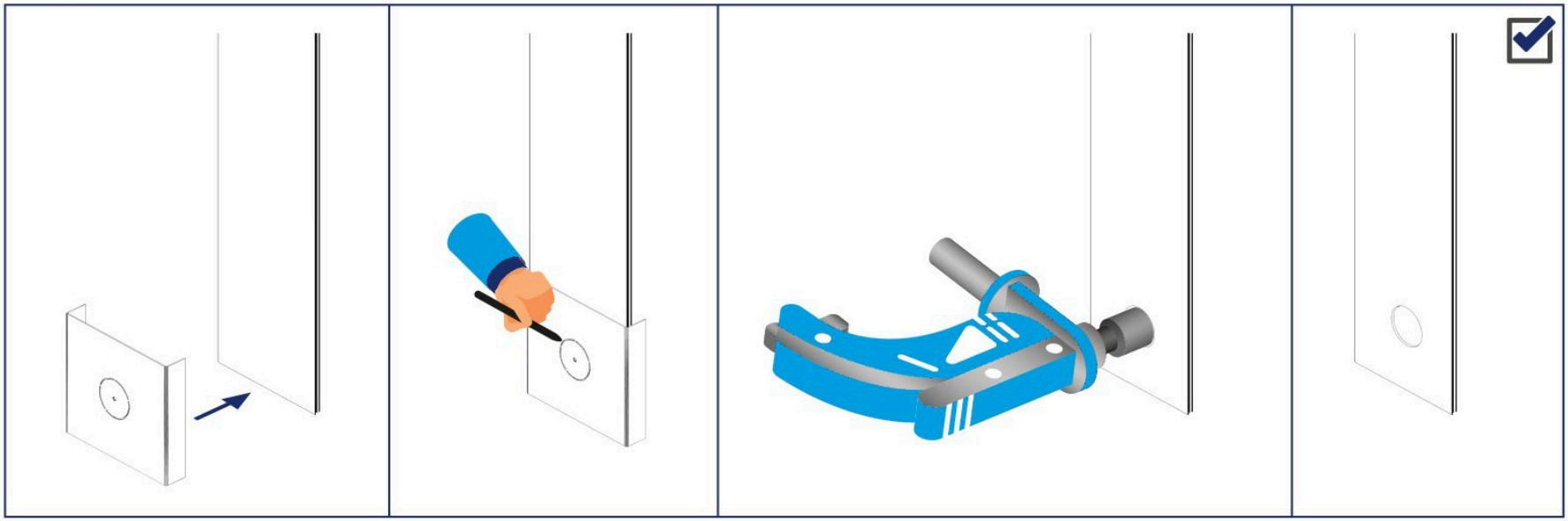

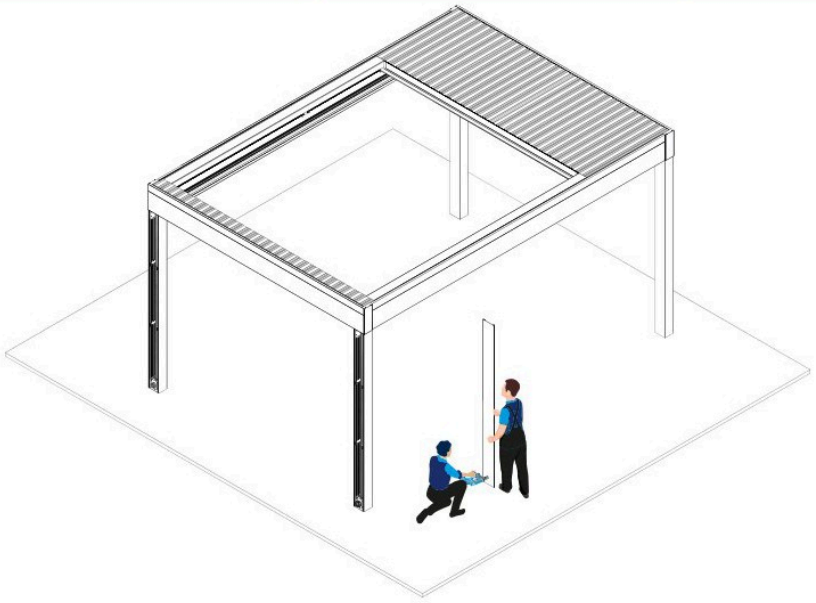

Next we fit the HN13 pillar front covers. First drill the drain holes in the covers. Use the layout plates supplied to mark their position.

Step 5.6

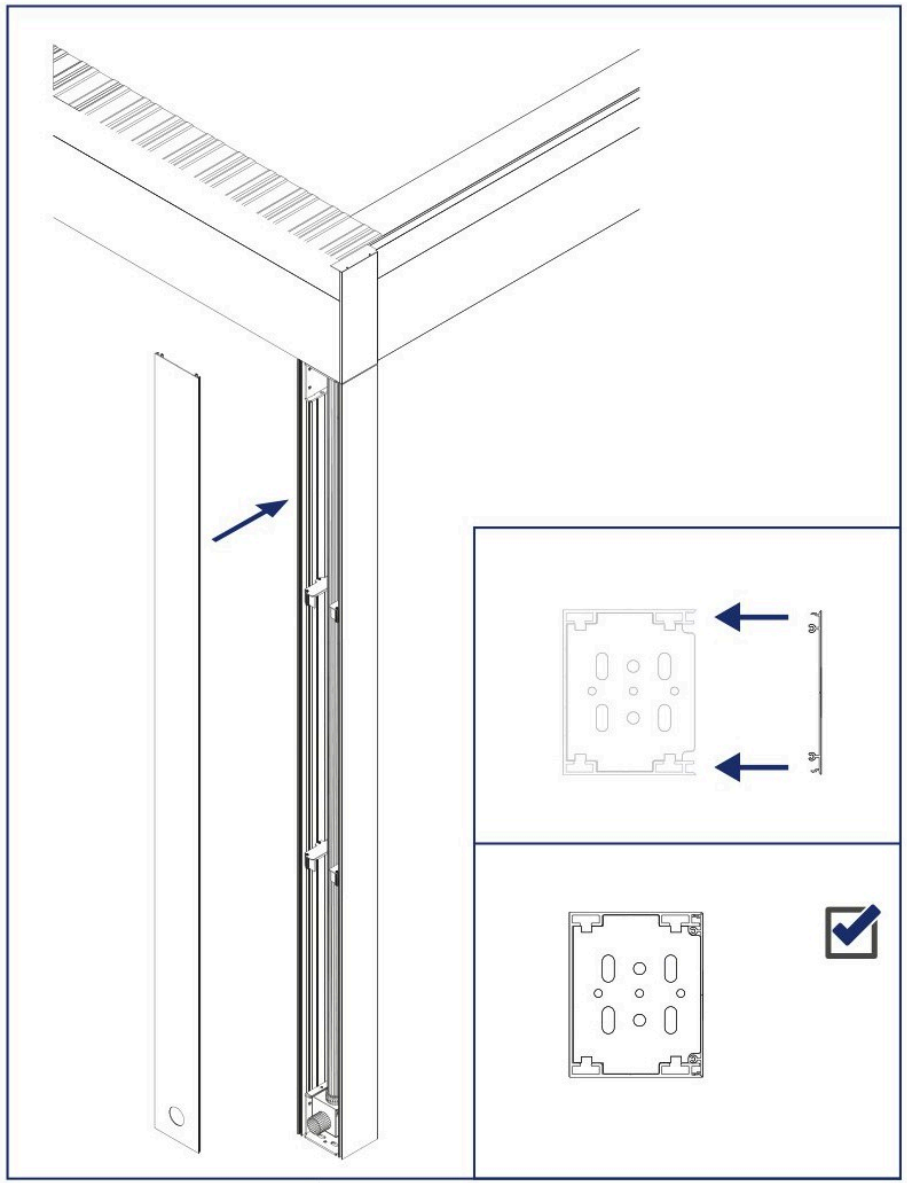

Clip the HN13 pillar covers, with the drain holes drilled in the previous step, onto the system. In areas with severe weather, add a few small screws at the clip points for support.

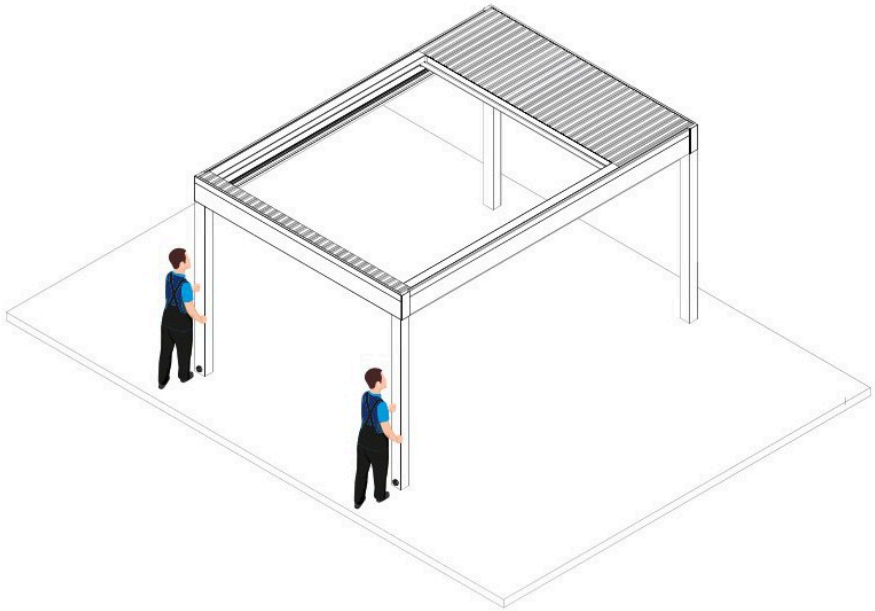

Step 5.7

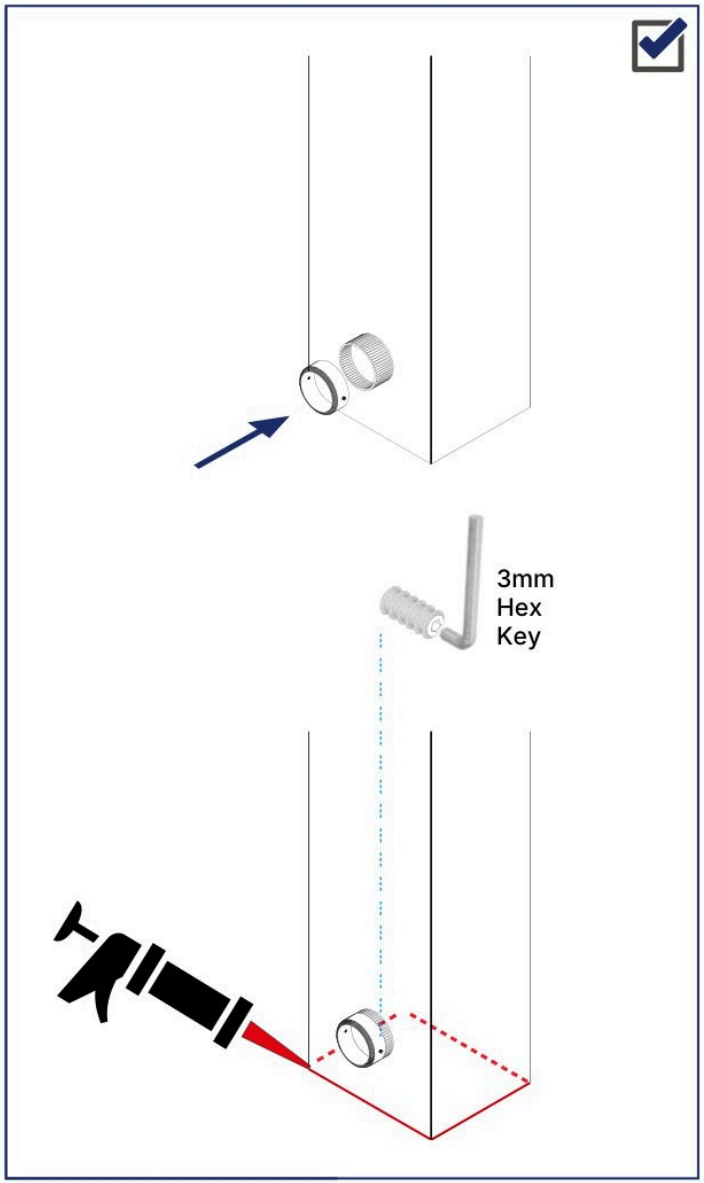

After fitting the pillar covers, fit and screw the HN17 water box outer part. As the last step, seal the base of every pillar where it meets the ground with silicone.

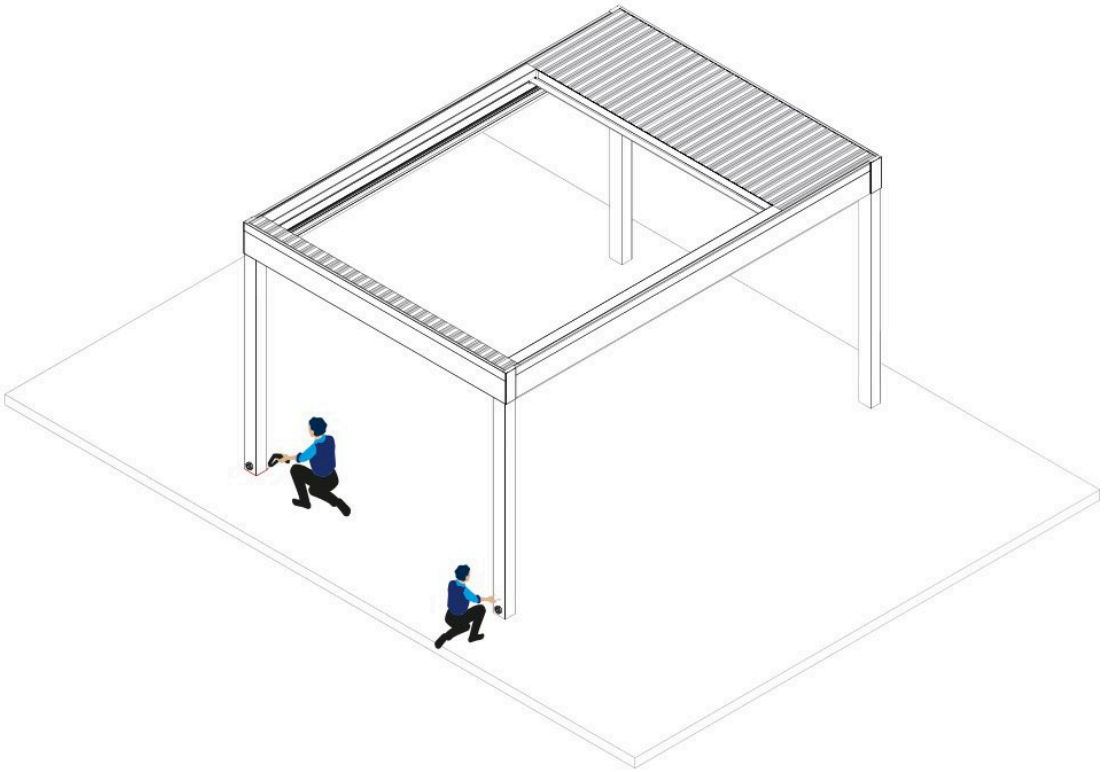

Your HAVEN NET is ready to use!

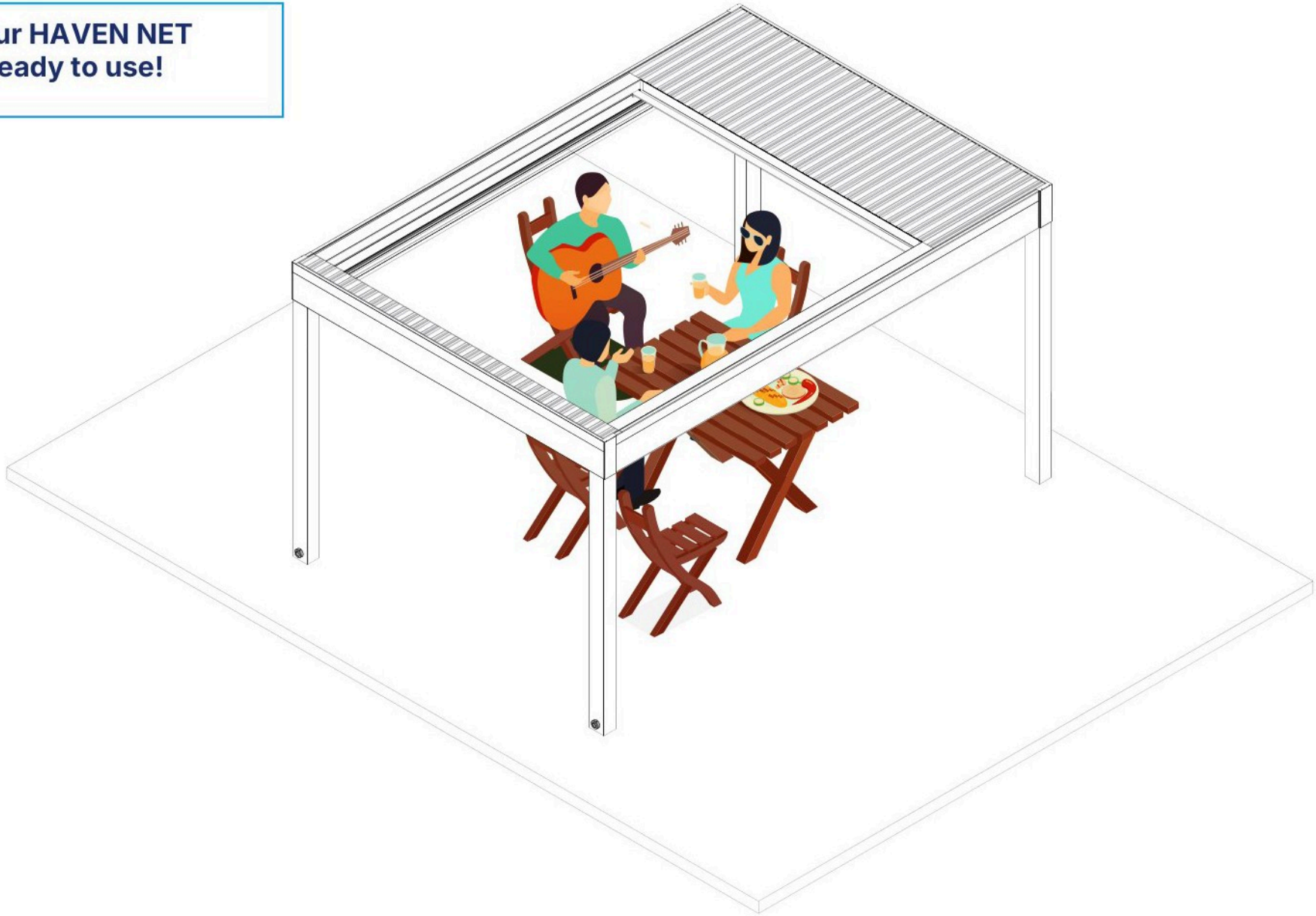

Thank you for choosing Pergolast. We hope you enjoy your Haven Net for many years.

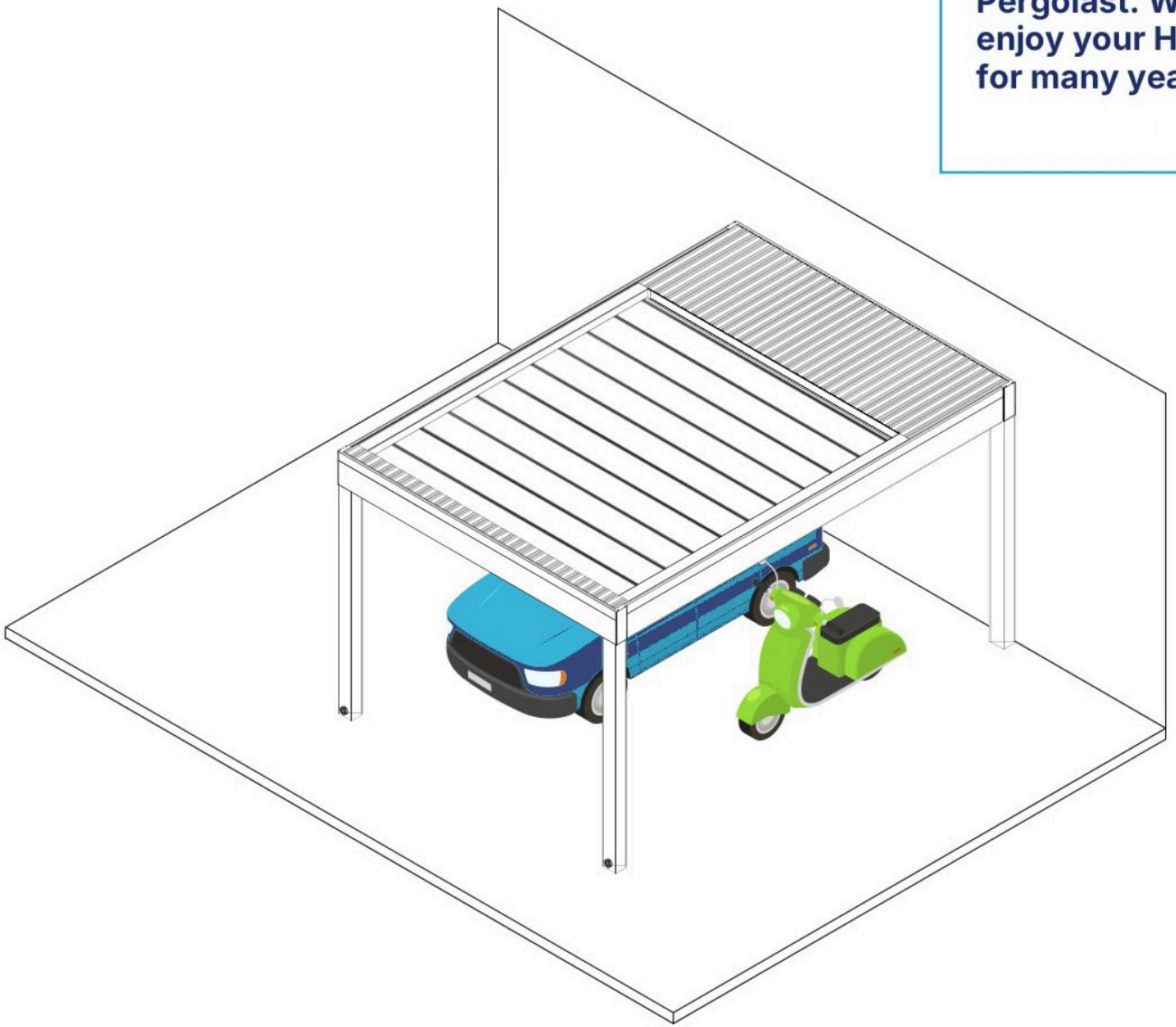

PERGOLAST
By GLASS GROUP

Need help? We're one call away.

A new pergola or a quote

Pergolast sales · (646) 495-9911 · sales@pergolast.com

Installation, repairs, parts or service

Pergola Installer · (908) 772-8189 · service@pergolainstaller.com

Register your warranty

Your contractor emails service@pergolainstaller.com within 30 days of finishing: order number, address, install date and photos of the finished system, anchors and wiring.

Keep this manual

Store it with your order confirmation and warranty certificate.