PERGOLAST By GLASS GROUP | NEW YORK

HAVEN COLLECTION

Haven Pro

RETRACTABLE LOUVERED ROOF

Open the whole sky. Close it with one touch.

Roof panels glide back on hidden rails and stack out of the way, opening up to three-quarters of the roof. Aluminum, aluminum with glass, or fully glazed.

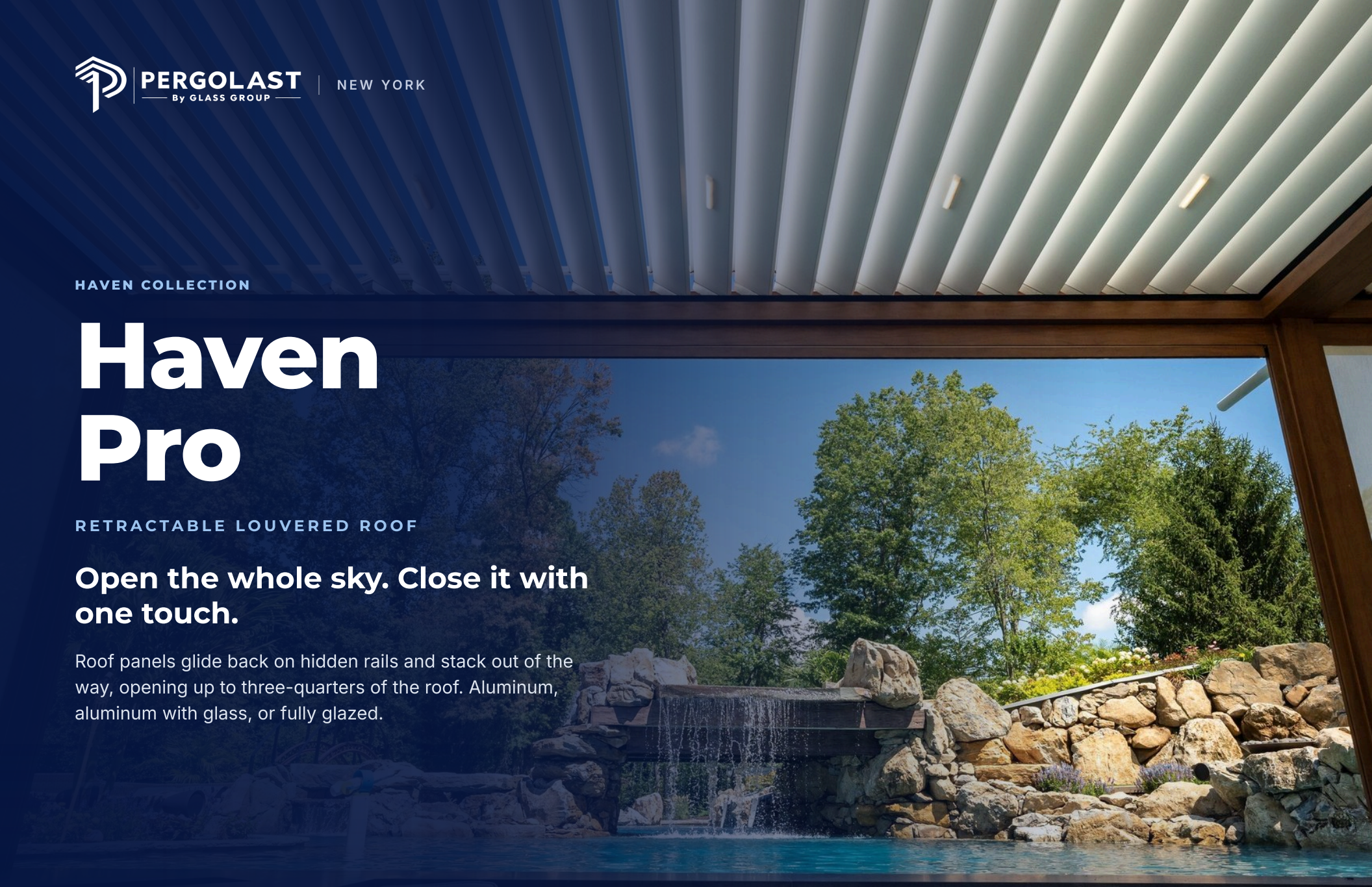

BUILT FOR

ARCHITECTS · OWNERS · CONTRACTORS · RESTAURANTS · EVENT VENUES

SHOWN Haven Pro, private residence · Chatham, NJ.



Haven Pro retracted over a poolside dining terrace

Slide it open. Slide it shut. Stay dry.

Where Haven tilts, Haven Pro retracts: the panels travel back on rails so the sky opens above the table.

01

Closed

Sealed edge to edge. Rain runs into concealed rail gutters.

02

Half open

Shade over the table, open sky beyond.

03

Open sky

Panels stack at 65°. Up to three-quarters of the roof opens.

ONE SYSTEM, FIVE WAYS TO USE IT

Architects	Three roof expressions (aluminum, Mix Glass, Pure Glass) in any RAL. Tested to ASTM E330 and AAMA 501.1.
Owners	Sun at noon, cover at dinner. The roof follows your day.
Contractors	Multi-bay to 34′-5″ wide, belt drive hidden in the rails, drainage through the posts.
Restaurants	Open on clear nights, close when rain comes. Rikasa seats its terrace under Haven Pro.
Event venues	Panels stack away for open-air events; glass roofs keep the space bright when closed.

Retractable louvers. Open sky on demand.

Louvers glide back along dual-channel rails with a hidden belt drive. Closed, rain runs through the rail channels to the gutter and down the posts.

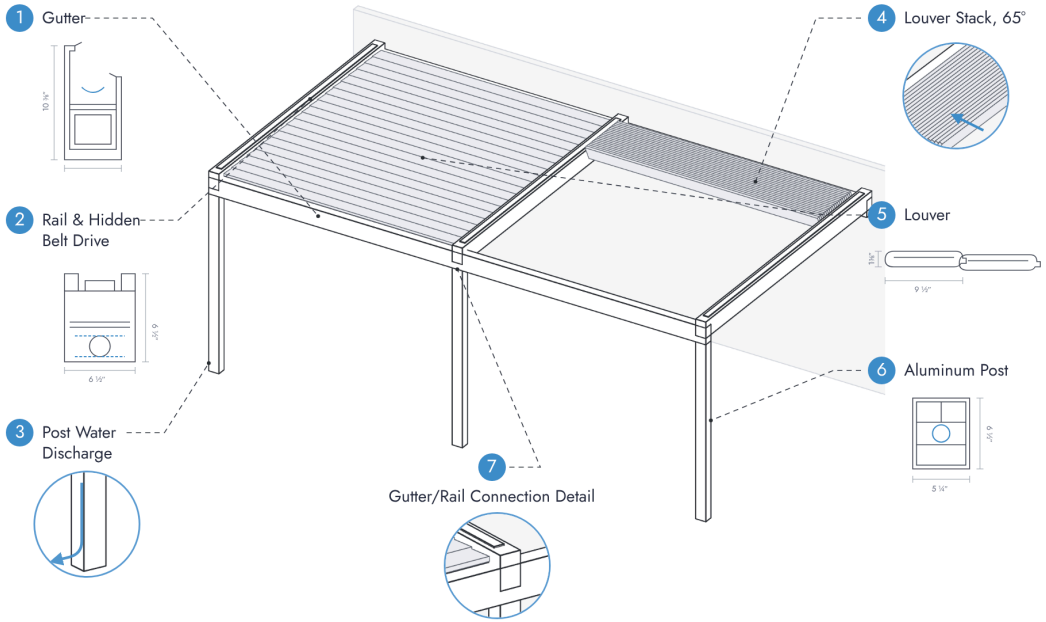

AT A GLANCE

5¼" × 6½"	**9½"**	**65°**	**Up to 75%**
Aluminum post	Louver blade	Stack angle	Roof opens

SPECIFICATIONS 03

SYSTEM	Retractable bioclimatic louver roof
COLUMN	Aluminum, 5¼″ × 6½″
GUTTER	Front and back, 5¼″ × 10⅜″
RAILS	6½″ × 6½″, dual channel, hidden belt drive
LOUVERS	9½″ aluminum; Mix Glass or Pure Glass options
OPERATION	Somfy motor, remote; stacks at 65°
TESTED	ASTM E330 ±15 psf design; AAMA 501.1 water
SIZE	Custom, up to 34′-5″ wide; extra rails add bays
PAIRS WITH	**Haven Shade, Haven Rise, Haven Glide**

FRAME FINISHES

9016 · 9006 · 9005 · 7021 · 8017 · 9001

7006 · 7016 · 7040 · Maple · Golden pine · Mahogany

Any RAL on request

Spans, wind and snow loads are engineered per project under local code, with PE review for the jurisdiction. Sizes and options confirmed at quote.

The real Haven Pro drawing.

Plan and three elevations of the retractable roof, straight from our CAD library.

GET THIS DRAWING

Download the DWG (AutoCAD)

pergolast.com/products/haven-pro-retractable-pergola

Scan, or click. Open “Documents” on the page.

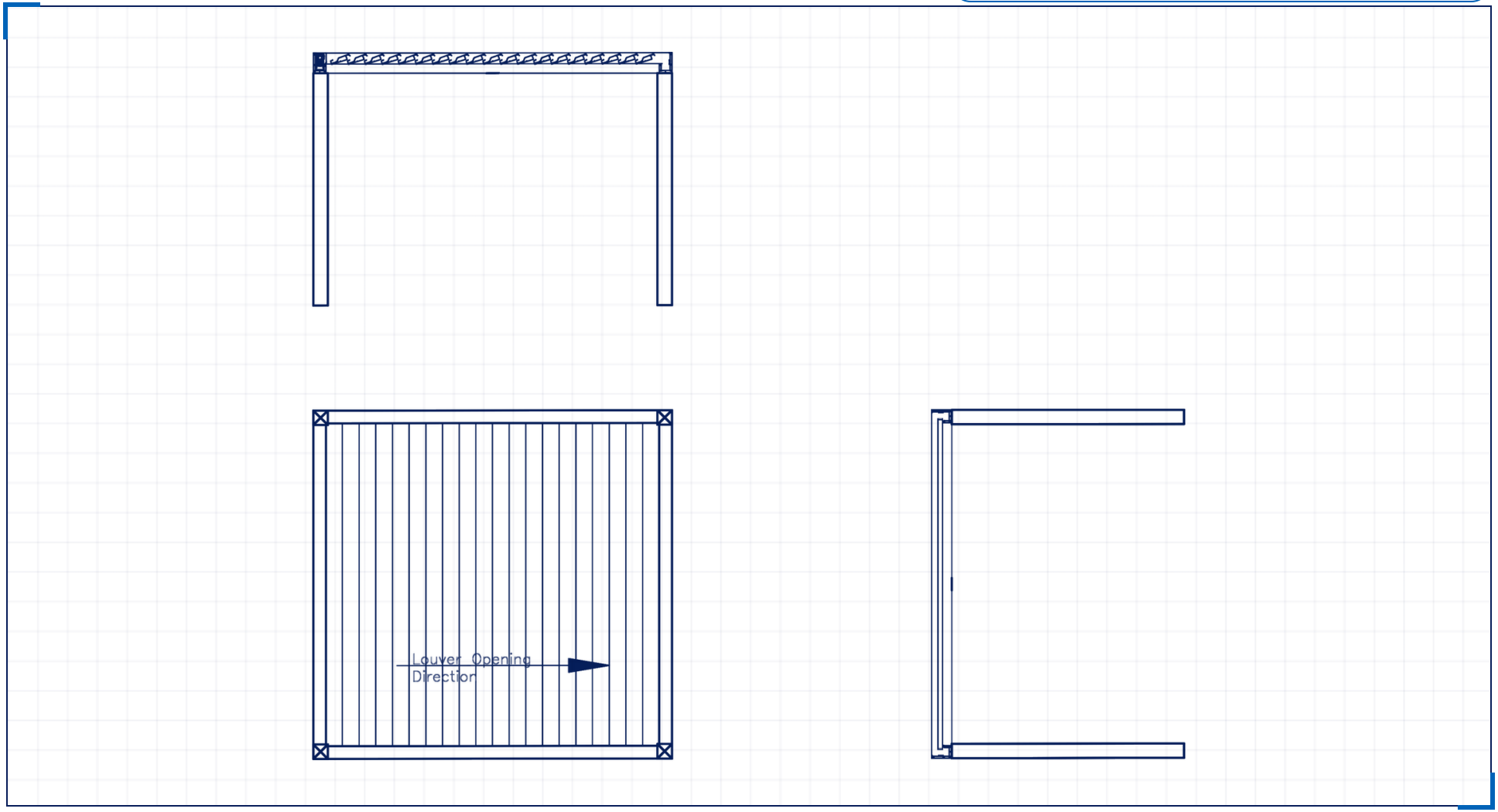

PERGOLAST	PRODUCT	DRAWING	DWG FILE	DOWNLOAD
	Haven Pro	CAD plan + elevations	pergolast-haven-pro-cad.dwg	pergolast.com/products/haven-pro-retractable-pergola

Open-sky terraces, from restaurants to rooftops.



Rikasa
Restaurant · Pittston, PA



Chatham
Private residence · NJ



Brooklyn
Private residence · NY

More Haven Pro projects: Fairfield, CT; Long Island, NY; Deal, NJ.

WHY PERGOLAST

Designed & engineered in New York
Pergolast is the outdoor-structure brand of Glass Group, a New York glazing contractor. Every structure is engineered for its site and jurisdiction.

Made to measure
Custom-fabricated to your dimensions, in 12 standard finishes or any RAL colour.

One team, one system
Roof, screens, glass, LED and heaters from one source, designed to work together.

Installed and backed
Professional installation, and the Pergolast Haven Collection limited warranty.

HOSPITALITY CLIENTS INCLUDE

Fogo de Chão · Char Steakhouse · Rikasa · Don Cheech · The Glass Ceiling · Water Gap Wellness Inn, plus private homes.

YOUR NEXT STEP

Let's open your sky.

Get your Haven Pro quote
Scan, send your size and finish, and we'll price it.
pergolast.com/pages/contact

ARCHITECTS
Request the spec sheet, CAD details and finish samples

CONTRACTORS
Send your drawings for pricing and shop drawings

OWNERS
Book a site visit and a design consultation

RESTAURANTS
Ask about seasonal enclosures that add seats

EVENT VENUES
Plan covered space for ceremonies and receptions

(646) 495-9911
sales@pergolast.com · pergolast.com
Pergolast
199 Water St, New York, NY 10038