LOUVER SERIES · 02

RETRACTABLE LOUVER PERGOLA

Haven Pro

Open the whole sky.

Close it with one touch.

Roof panels glide back on hidden rails and stack neatly, opening up to three-quarters of the roof. Choose aluminum, aluminum with glass, or a fully glazed roof. Custom-sized to your space.

ARCHITECTS · CONTRACTORS · RESTAURANTS · HOMEOWNERS



Three roof expressions

CUSTOM-FABRICATED TO ORDER

Slide it open. Slide it shut. Stay dry.



0%

Closed

Sealed edge to edge. Rain runs into concealed rail gutters.



50%

Half open

Part-stacked: shade over the table, open sky beyond.

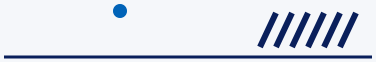

75%

Open sky

Panels stack at 65°. Up to three-quarters of the roof opens.



Glass

Daylight when closed

With glass panels the roof stays bright even when it is shut.



RESTAURANT PATIO

Open-air tables, any forecast

Roll the roof back on clear nights. Close it the moment rain arrives and keep every table seated.



HOME & BACKYARD

Sun when you want it

Open for the afternoon, shut for shade or a passing shower. The terrace becomes the room the family uses most.



ROOFTOP & COMMERCIAL

A roof that steps aside

Panels stack out of sight for event nights; glass versions keep amenity spaces bright all year.

What you expect, and what you get

FOR ARCHITECTS & DESIGNERS

Your design, with the sky built in

YOU EXPECT

A roof that holds the design intent and opens fully when the design calls for sky.

- **Custom-sized** to your grid and opening, not a stock kit
- **Three roof expressions:** aluminum, mixed or fully glazed
- **Any RAL finish** to match the facade palette
- **Concealed drainage** through rails and columns, no visible downspouts
- **Independently tested** to ASTM E330 and AAMA 501.1

"Can the roof read as glass?"

Yes. Pure Glass louvers keep daylight even when closed. Mix Glass balances shade and light.

→ Request the spec sheet & details

FOR CONTRACTORS & GCS

One sub. One scope. One schedule.

YOU EXPECT

A clean scope you can price, schedule and hand off without surprises.

- **Single source** for roof, sides, glass and lighting
- **Drawings and engineering** for your site, from our design team
- **Factory-fabricated** to measured dimensions
- **Milestone billing** tied to design, fabrication, shipping and install
- **Trade pricing** for registered contractors

"How long is the install?"

The system goes up in five steps. A typical 20' × 13' roof is installed in about a day.

→ Send us your drawings for a bid

FOR RESTAURANT & HOME OWNERS

Open sky on the good days

YOU EXPECT

A space that opens fully in fine weather and closes tight when it turns.

- **One button** on the remote opens or closes the whole roof
- **Wind, rain and sun sensors** can close it for you
- **Glass options** keep the space bright when it is shut
- **Light it at night** with optional dimmable LED
- **Installed by our partner team.** One contact from quote to handover

"What if it rains during service?"

The rain sensor closes the roof on its own, and guests stay seated.

→ Book a site visit

Why it matters: people buy the open sky, not the louver. Each column answers: what do I get, and what do I do next?

Retractable louvers.
Open sky on demand.

Retractable bioclimatic louver system. The louvers glide back along hidden rails and stack at 65°, opening the roof to the sky. Closed, rain runs through the rail channels into the gutter and leaves through the posts.

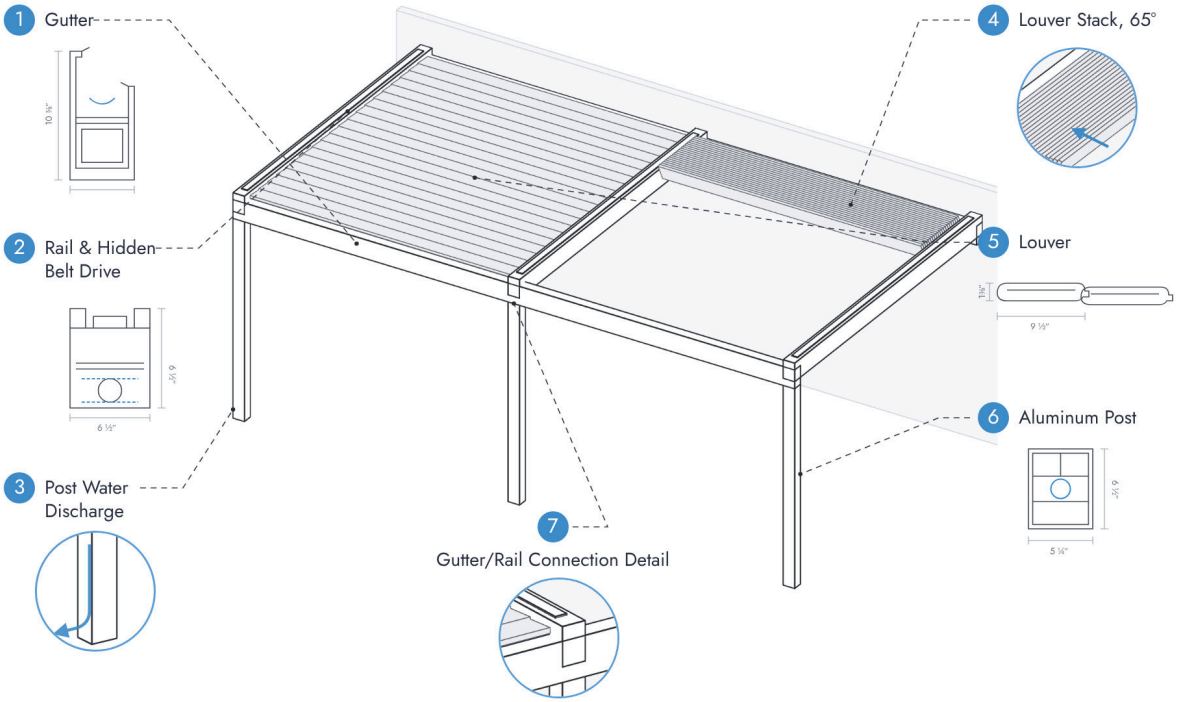

KEY PROFILES

5¼" × 6½"	**5¼" × 10⅜"**	**9½" × 1⅜"**	**65°**
Aluminum post	Gutter profile	Louver blade	Louver stack angle

SPECIFICATIONS

SYSTEM	Retractable bioclimatic louver pergola
COLUMN	Aluminum, 5¼″ × 6½″
GUTTER	Front and back, 5¼″ × 10⅜″
RAILS	6½″ × 6½″, dual channel, belt drive hidden inside
DRAINAGE	Concealed: rail channels to the gutter, down through the posts
LOUVERS	9½″ aluminum blades. Mix Glass and Pure Glass options †
OPERATION	Somfy motor, remote. Louvers slide back and stack at 65°
FINISH	12 standard finishes incl. 3 wood-grain looks, or any RAL colour †
SIZE	Custom to your space, multi-bay
LOADS	Tested to ASTM E330, ±15 psf design. Code-designed for wind & snow per ASCE 7-16 at project location*

FEATURES

- WATERPROOF WHEN CLOSED
- WIND-LOAD TESTED
- RETRACTS TO OPEN SKY
- REMOTE CONTROLLED
- DIMMABLE LED OPTION
- CUSTOM RAL FINISHES

* Example NYC basis ≈ 40 psf wind / 20 psf snow. Final spans and loads are confirmed per project by engineering, with PE review for the jurisdiction. Test: ASTM E330 ±15.0 psf design / ±22.5 psf proof, AAMA 501.1 water.
† Designer note: glass make-up and finish process to be confirmed before print.
Shown: 2-bay wall-mounted Haven Pro, 26′-8″ × 14′-4″, Atlantic Beach, NY. Roof only; side systems not shown.

The real Haven Pro drawing.

Plan and three elevations of the retractable roof, straight from our CAD library.

GET THIS DRAWING

Download the DWG (AutoCAD)

pergolast.com/products/haven-pro-retractable-pergola

Scan, or click. Open “Documents” on the page.

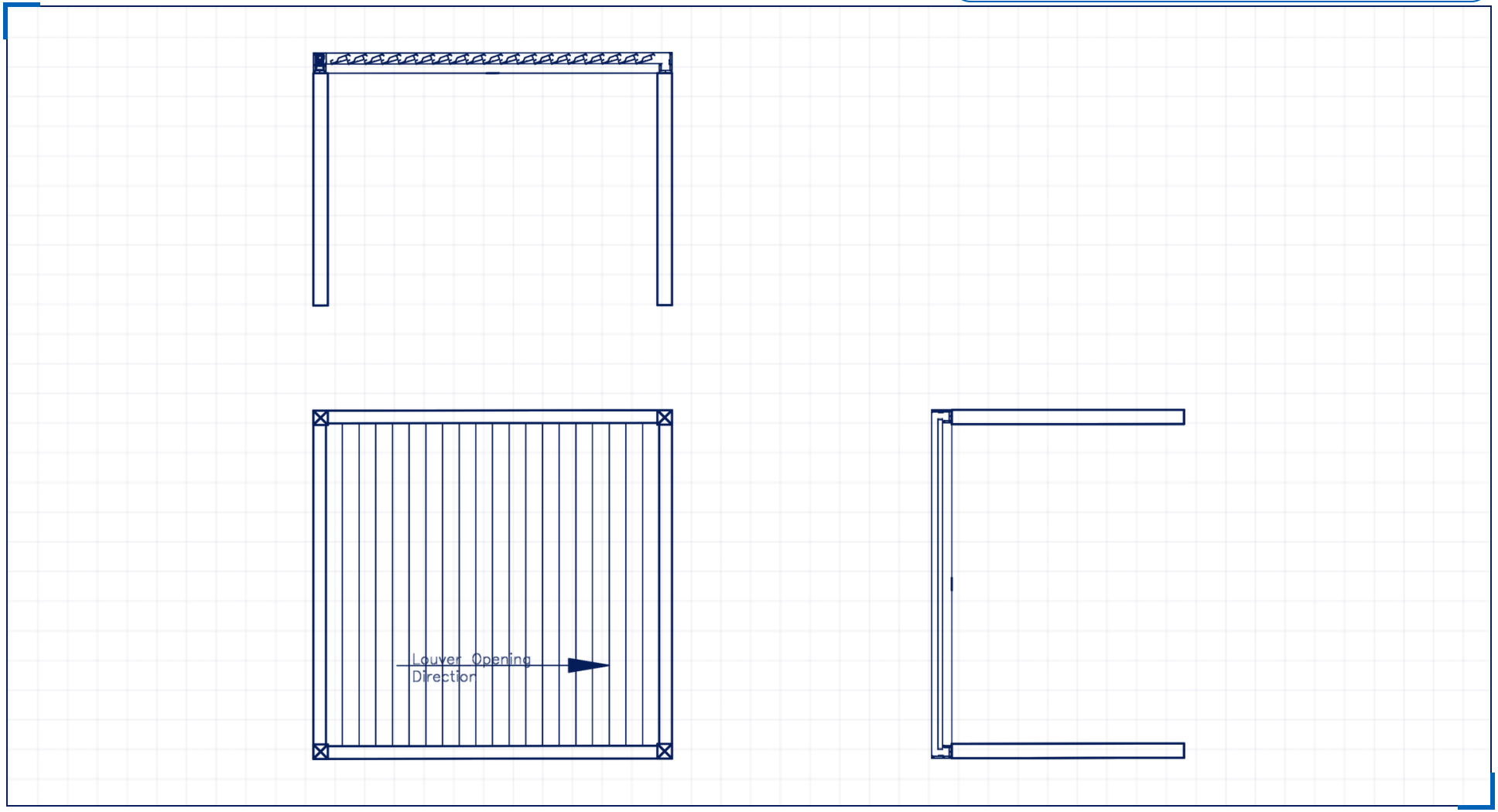

PERGOLAST	PRODUCT	DRAWING	DWG FILE	DOWNLOAD
	Haven Pro	CAD plan + elevations	pergolast-haven-pro-cad.dwg	pergolast.com/products/haven-pro-retractable-pergola

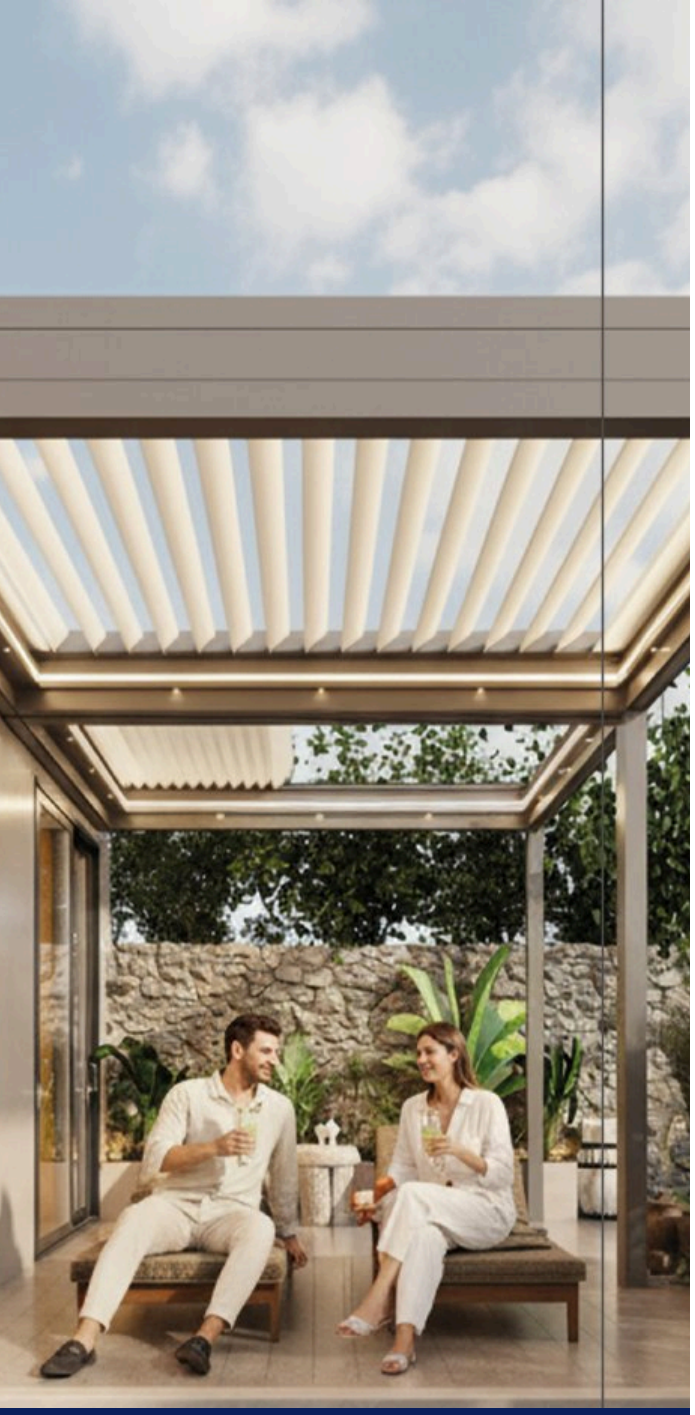

Built around how you'll use it

Choose the roof, then add LED for evenings, sensors for weather, and screens or glass sides when the wind picks up.

HAVEN PRO · CONFIGURE

Make it yours in four choices

1 SIZE

Custom-fabricated to your measured width, depth and height. Up to 34'-5" wide; extra rails add bays as the width grows.

2 ROOF



Active
Fully aluminum louvers



Mix Glass
Aluminum and glass louvers



Pure Glass
Fully glazed louvers

3 FINISH

9016	9006	9005	7021	8017	9001	7006
White	Aluminum	Jet black	Black gray	Chocolate brown	Cream	Beige gray

7016	7040	9403-205	9403-C.065	9503-C.066	Any RAL
Anthracite	Window gray	Maple	Golden pine	Red mahogany	on request

4 ADD-ONS

Dimmable LED
Perimeter lines and spots

Weather sensors
Wind, rain and sun

Insulated panels
Active roof option

HAVEN COLLECTION
Haven Shade
Motorized screens · wind, sun, privacy

HAVEN COLLECTION
Haven Rise
Guillotine side glass

HAVEN COLLECTION
Haven Glide
Sliding glass doors · full enclosure

GET YOUR PRICE

Send us your dimensions and we'll price your Haven Pro.

(646) 495-9911
sales@pergolast.com

From idea to installed

1 **Get your quote**
Fill in the form on pergolast.com, or call us.

2 **Design & engineer**
We measure, draw and engineer it for your site.

3 **Fabricate**
Built to your dimensions and shipped to site.

4 **Install**
Our installation partner builds it on site.

Design & quotes

Send photos and rough dimensions. Our design team replies with ideas and a quote for your Haven Pro.

sales@pergolast.com

Installation

Our installation partner team schedules and builds your Haven Pro on site.

service@pergolainstaller.com

RECENT PROJECT





Private residence

Deal, NJ

A long poolside terrace under a white **Haven Pro** retractable louver roof, with ceiling fans and an outdoor kitchen. The louvers slide back to open the sky over the dining table.

COMPLETE IT WITH THE HAVEN COLLECTION

Haven Shade
Motorized screens

Haven Rise
Guillotine glass

Haven Clear
Fixed glass

Haven Glide
Sliding glass doors

YOUR NEXT STEP

Get your quote.

Request your quote

Scan to open our quote form. Tell us your size, roof type (Active, Mix or Pure Glass) and options, and we'll send your Haven Pro quote.

pergolast.com/pages/contact

ARCHITECTS

Request the spec sheet & details

CONTRACTORS

Email your drawings for a bid

RESTAURANT & HOMEOWNERS

Book a site visit

(646) 495-9911

sales@pergolast.com · pergolast.com
Pergolast · 199 Water St, New York, NY 10038



HAVEN PRO PROJECT 01 / 06

Chatham

New Jersey · Private residence

A made-to-measure Haven Pro roof with a wood-look finish shades the swim-up seating and the sunken bar, and keeps guests covered when the weather turns.

Haven Pro | Haven Shade



HAVEN PRO PROJECT 02 / 06

Fairfield

Connecticut · Private residence

On an upper-floor balcony, a Haven Pro roof with guillotine glass gives this room cover and flexibility all year, without losing the view of the canal next door.

Haven Pro | Haven Rise | Haven Shade

HAVEN PRO PROJECT 03 / 06

Brooklyn

New York · Private residence

The empty space above a garage is now a fully equipped outdoor kitchen, with a Haven Pro roof, sliding glass, motorized screens, climate control and a television.

Haven Pro | Haven Glide | Haven Shade



HAVEN PRO PROJECT 04 / 06

Long Island

New York · Private residence

A freestanding Haven Pro roof over the outdoor kitchen and dining terrace. Turn the louvers to set the sun, shade and air you want, and the space is ready to entertain at any time of day.

Haven Pro



HAVEN PRO PROJECT 05 / 06

Pittston

Pennsylvania · Rikasa Restaurant

A Haven Pro louvered roof and sliding glass panels on the rooftop nearly doubled Rikasa's seating capacity, bringing more business through the year and an al fresco table diners ask for.

Haven Pro | Haven Glide





HAVEN PRO PROJECT 06 / 06

Deal

New Jersey · Private residence · Pool house & cabana

White Haven Pro roofs frame the outdoor living room and a garden pavilion beside the pool, with a sleek, watertight Haven Pro cabana at the far end of the pool for shade and style all summer.

Haven Pro | Haven Shade