PERGOLAST
By GLASS GROUP




INSTALLATION MANUAL

# Haven Pro

Retractable louver roof pergola. Step-by-step for your contractor or Pergola Installer.

Five steps, about a day on site for a 20′ × 13′ roof

2+ people

Licensed electrician for power

## Before you start: 4 rules

### Never install alone
This is a job for two people or more. Panels and beams are heavy.

### Check every part first
Lay all parts out in the order you will use them. Count them against the parts list.

### Base comes first
Pour footings or check the slab before delivery day. Follow the PE-reviewed design and local code.

### Power by an electrician
A licensed electrician connects the motor to a US 120 V / 60 Hz supply.

## Tools you need

- Tape measure
- Spirit level
- Drill
- Hex keys
- Wrench
- Work gloves
- Safety glasses
- 2 step ladders
- Concrete screws

## The 5 steps at a glance

**STEP 1**
### Frame and standing profiles
Stand the posts up, bolt them down and level them.

**STEP 2**
### Rails and drainage
Fix the rails and connect the gutters to the posts.

**STEP 3**
### Motor and panels
Mount the motor, then slide in the roof panels.

**STEP 4**
### Electrical and lighting
Your electrician connects the motor, remote and lights.

**STEP 5**
### Covers and caps
Clip on the covers, then open and close the roof to test it.

## How to use this manual

### Find your parts by code
Every part has a code, like HP 11. The same code is on the parts list and the box.

### Follow the steps in order
Do not skip ahead. Each step builds on the one before it.

### Stuck? Call us
Pergola Installer · (908) 772-8189. We'd rather answer a question than fix a mistake.

# Introduction

## Thank you for choosing Pergolast Haven Pro.

These instructions give the tips and key information you need to assemble the product safely and maintain it properly. Read all of the instructions before you start, and follow the steps in the order given.

1. Make sure you have all the parts you need.
2. Lay the parts out in order around the installation area.
3. Mark out the installation area.
4. Prepare a footing (where needed).

**WARNING:**
NEVER INSTALL ALONE!

5. Make sure you have all the tools you need:

- Tape Measure



- Work Gloves



- Safety Glasses



- Concrete Screw
Threaded Rod & Square Nut




- Drill



- Hex Key Set



- Spirit Level

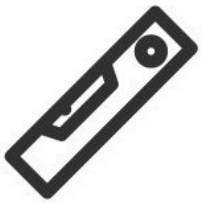

- 2 Small Step Ladders



- Wrench



# Product Section View

## A-A

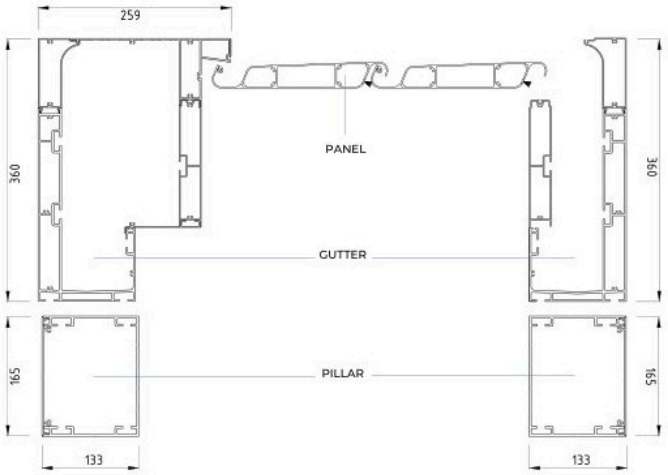


### Information:

Below you can see the A-A cross-section of the Haven Pro system, and under it the B-B section. They show every connection between the parts, and how each part is sealed against water and air.

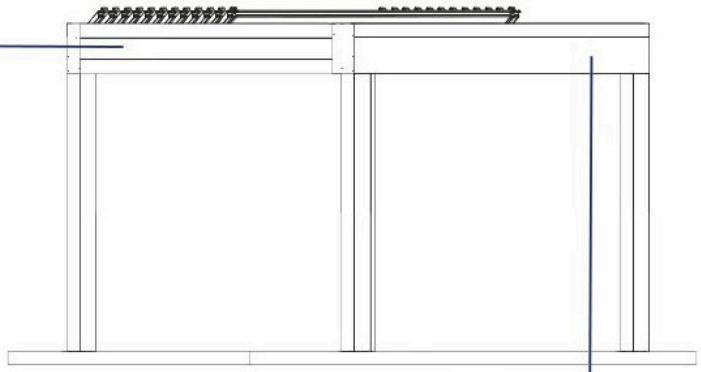

## B-B

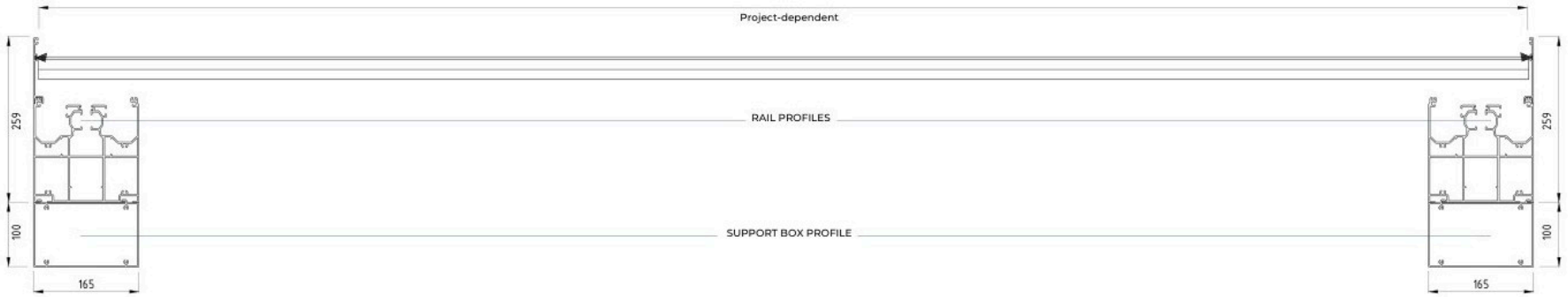

# List of Parts

**Part quantities vary by project size!**

## Pillar Parts

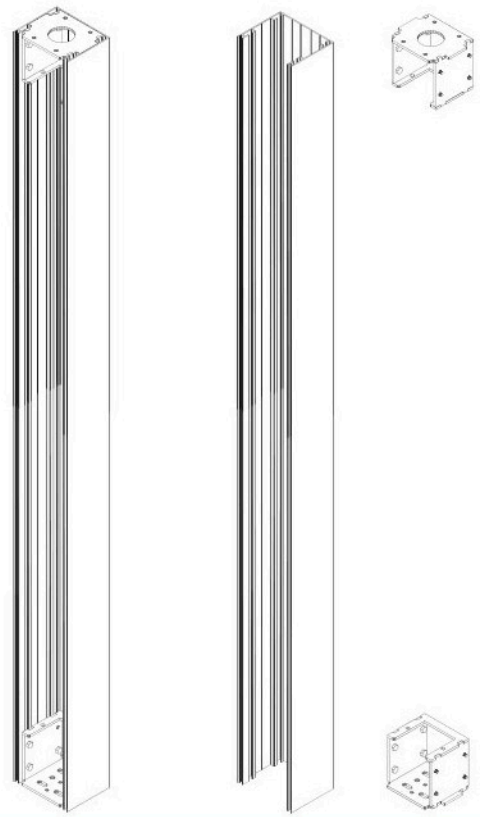

**HP 11**
Pillar Profile

## Caps & Water Exiting Parts



HP 12 Pillar Side Caps



**HP 15**
Filter



**HP 17**
Pillar Pipe Connector

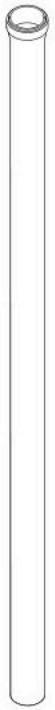

**HP 16**
Pillar Pipe



**HP 13**
Pillar Front Cover



**HP 14**
Water Drain Box

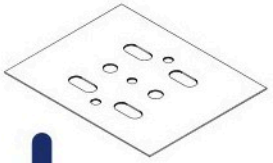



Layout Plate

# List of Parts

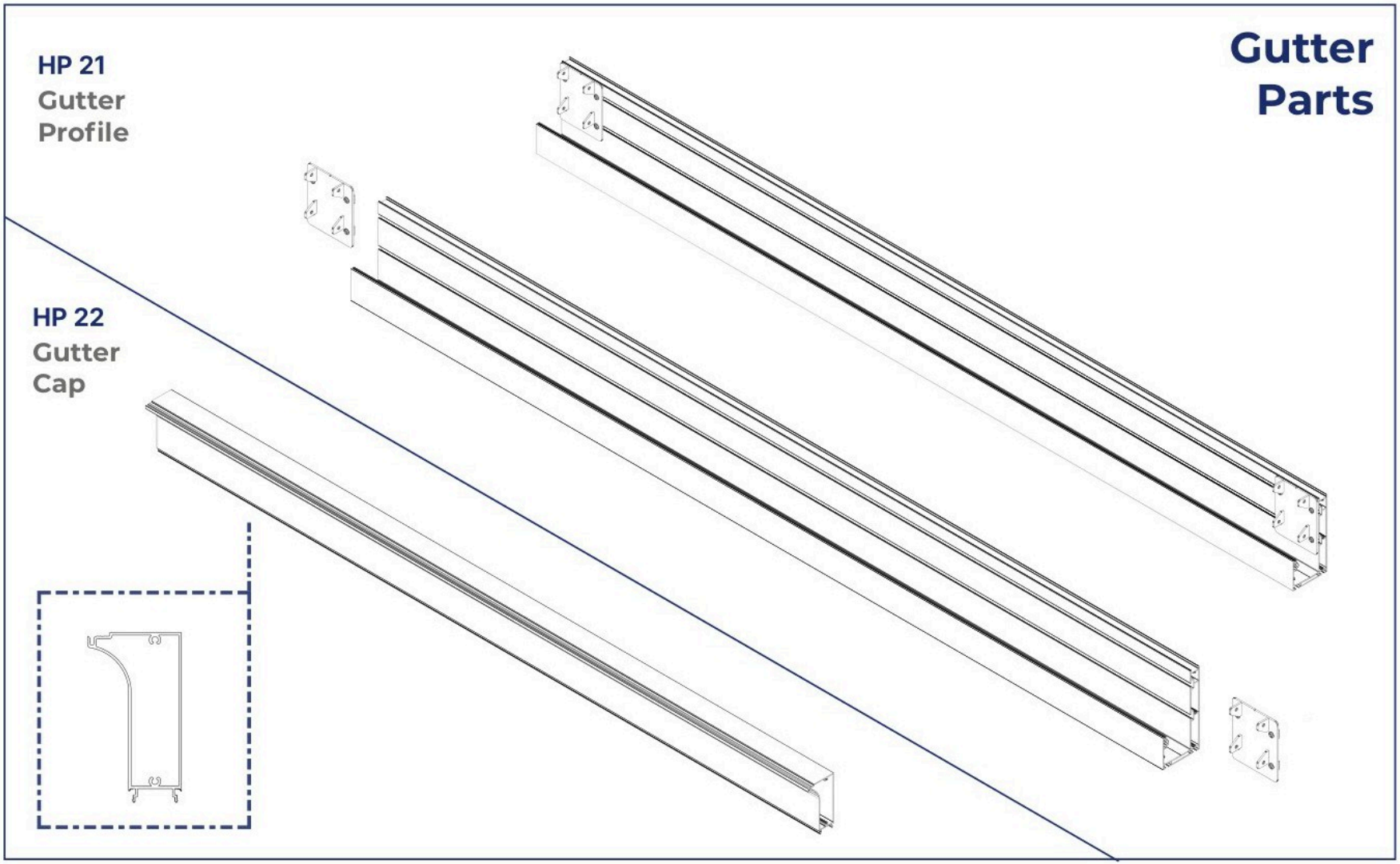

# List of Parts

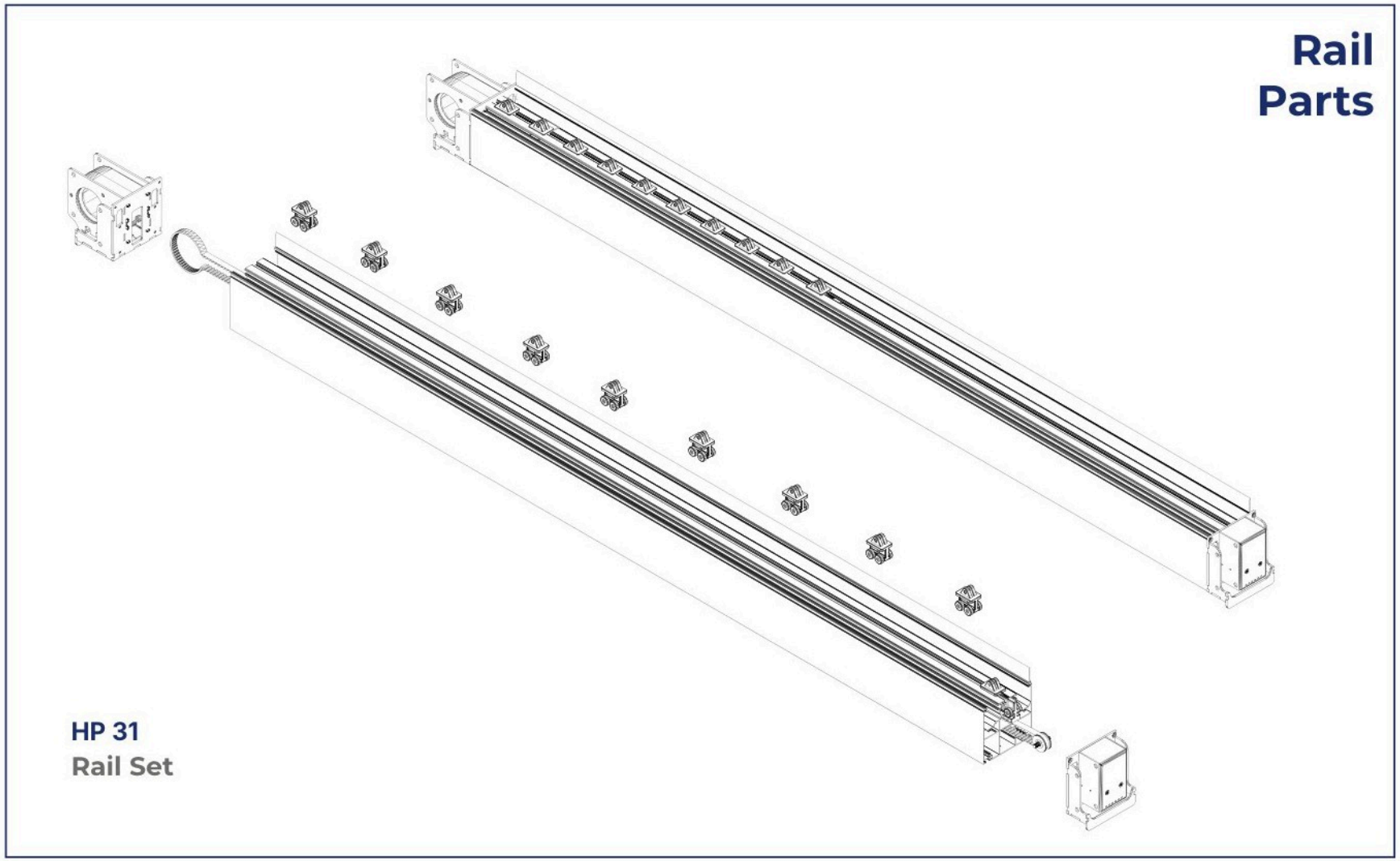

# List of Parts

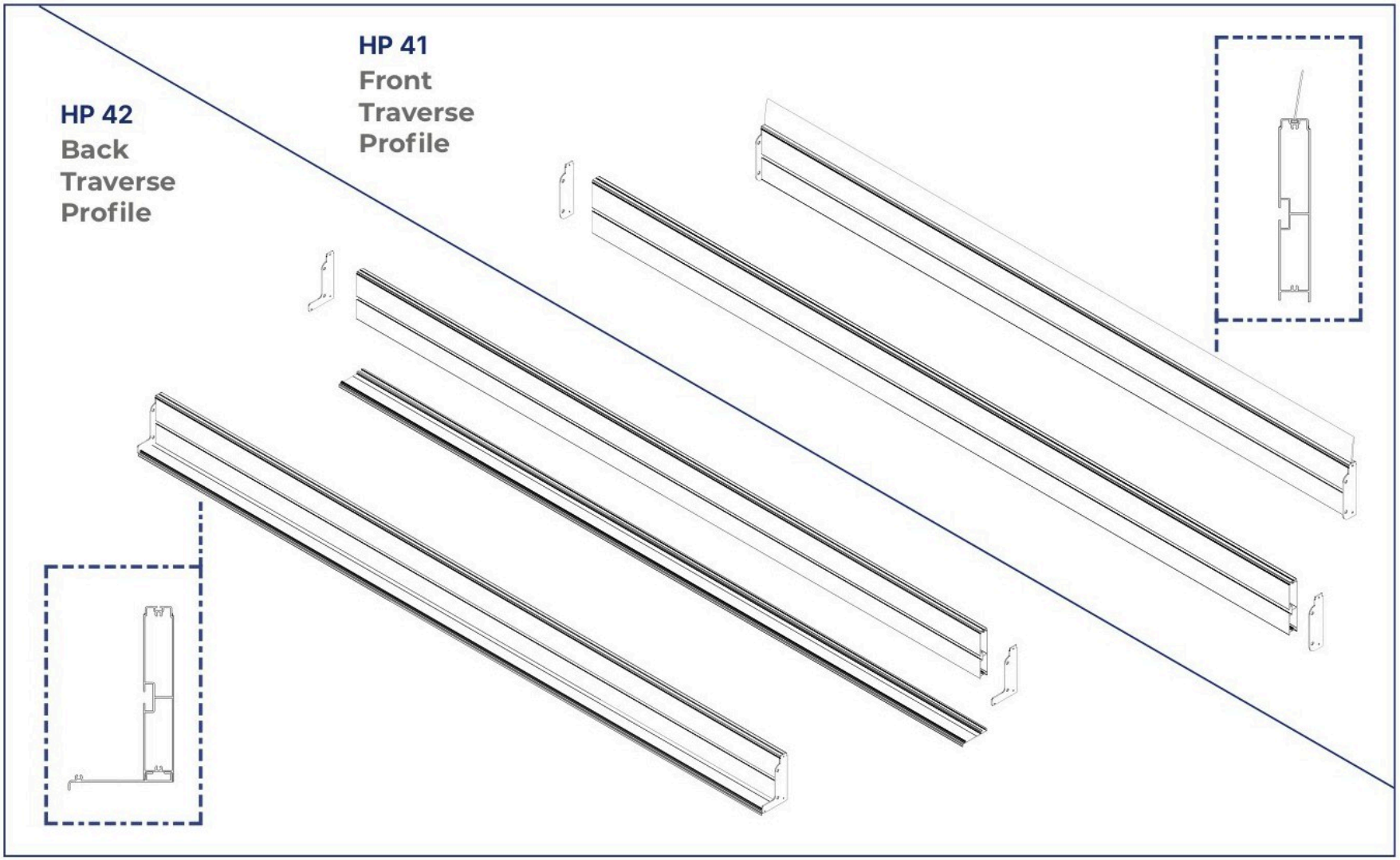

# List of Parts

## Motor Parts

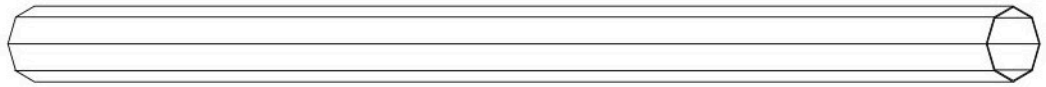

**HP 51**
Motor Tube



**HP 52**
Motor

## Panel





**HP 61**
Panel

# List of Parts

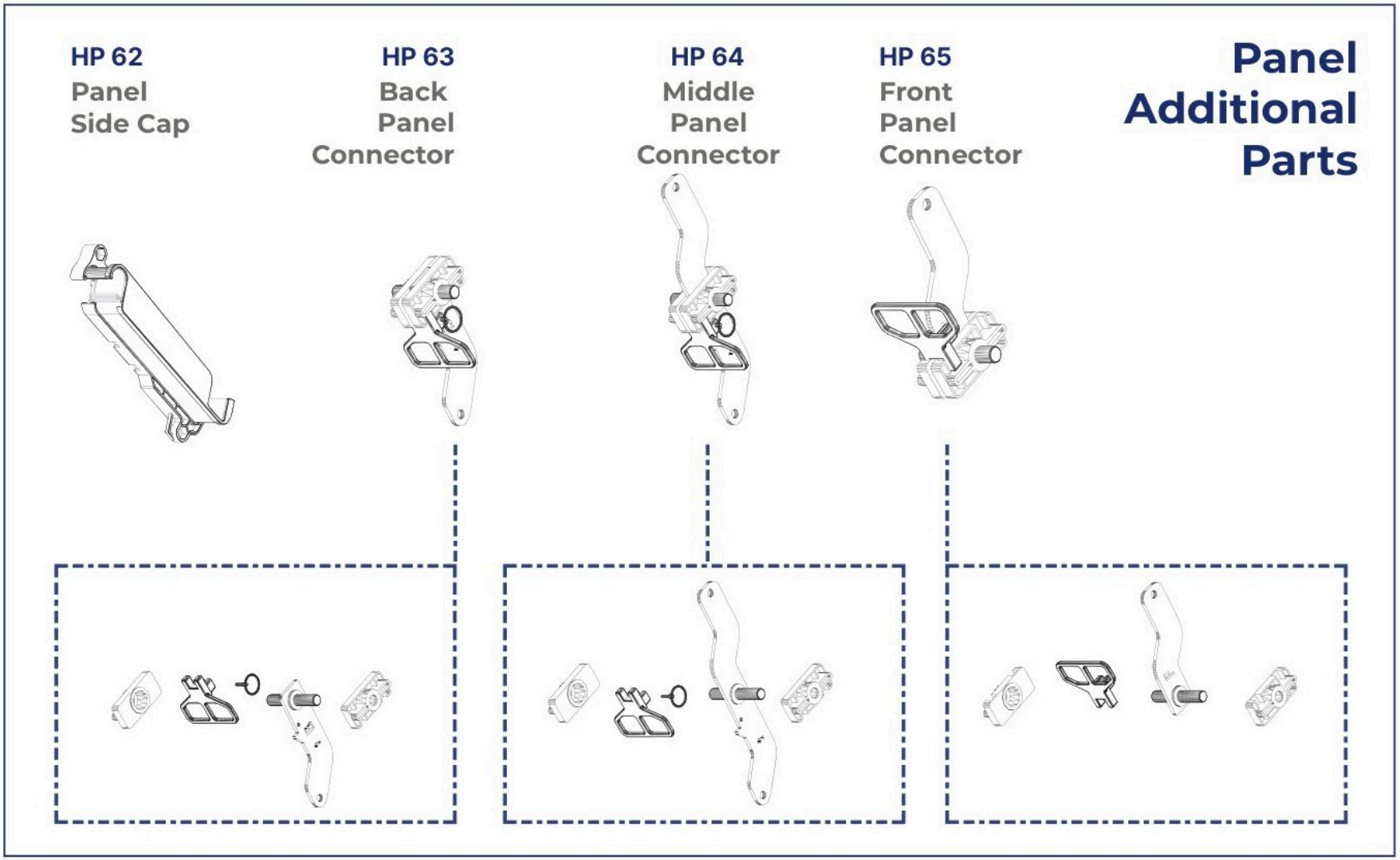

# List of Parts

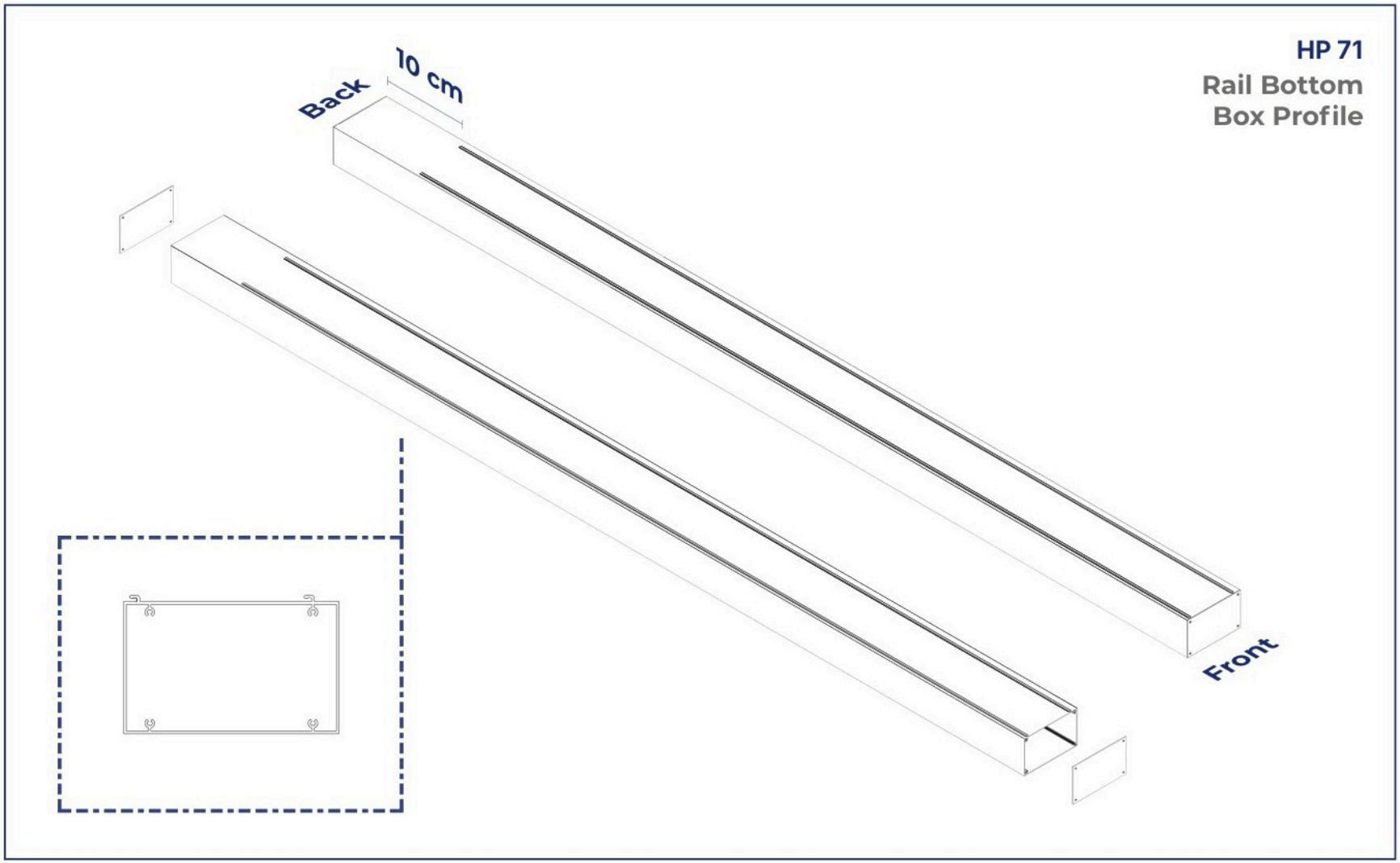

# List of Parts

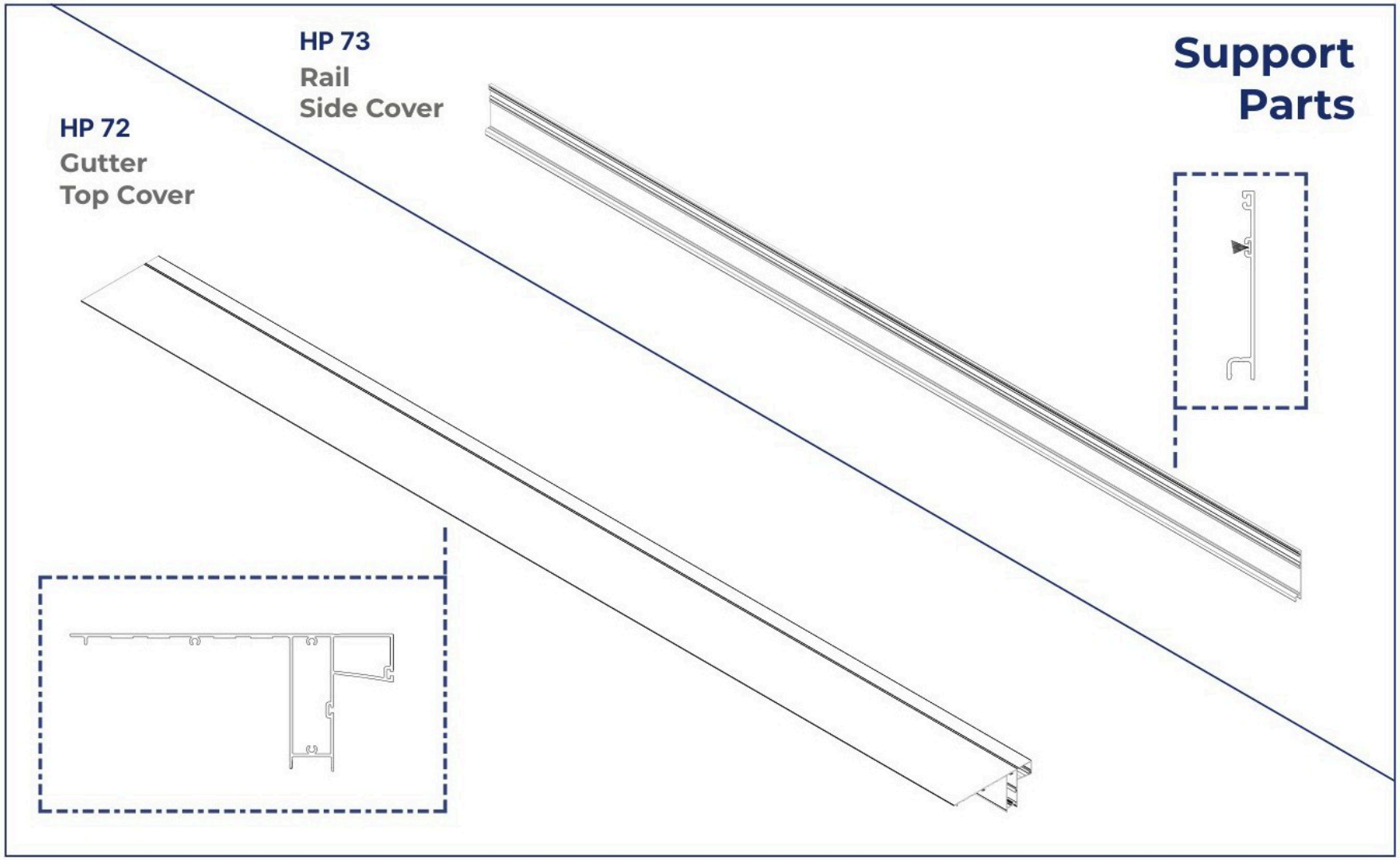

In this step, mark where each pillar will stand. Use the small layout plates shipped with your system, and the dimensions of your project plan.

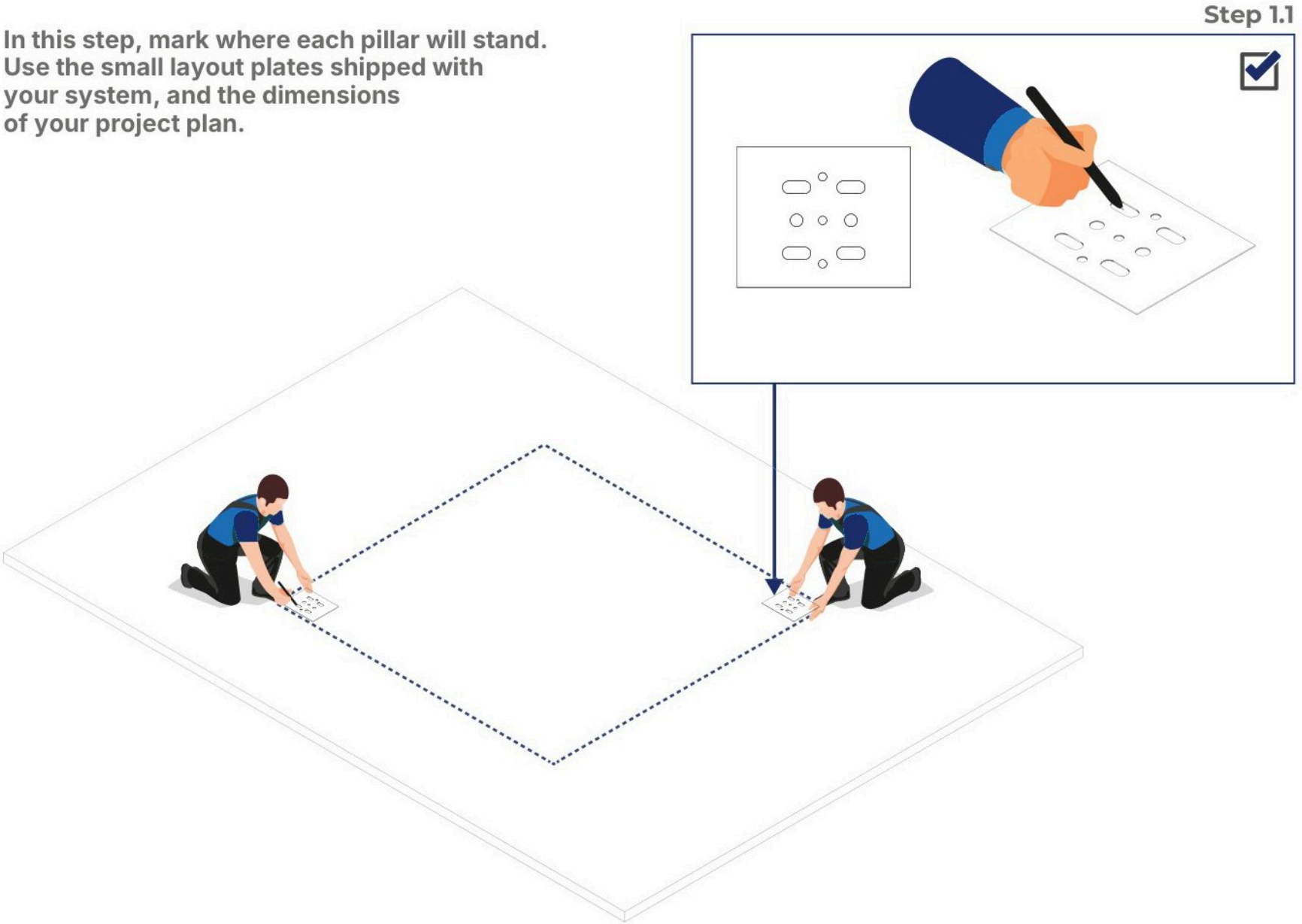

Step 1.2

In this step you join the
HP 11 pillars to the HP 21 gutter
with connector screws, using a wrench.
Lay the pillars parallel
on the ground.
Seat one long gutter into the cut-outs
at the top of the pillars and connect them
as shown. Do this for both
the front and back frames.
Then clip the HP 22 cap onto the HP 21
gutter as shown.

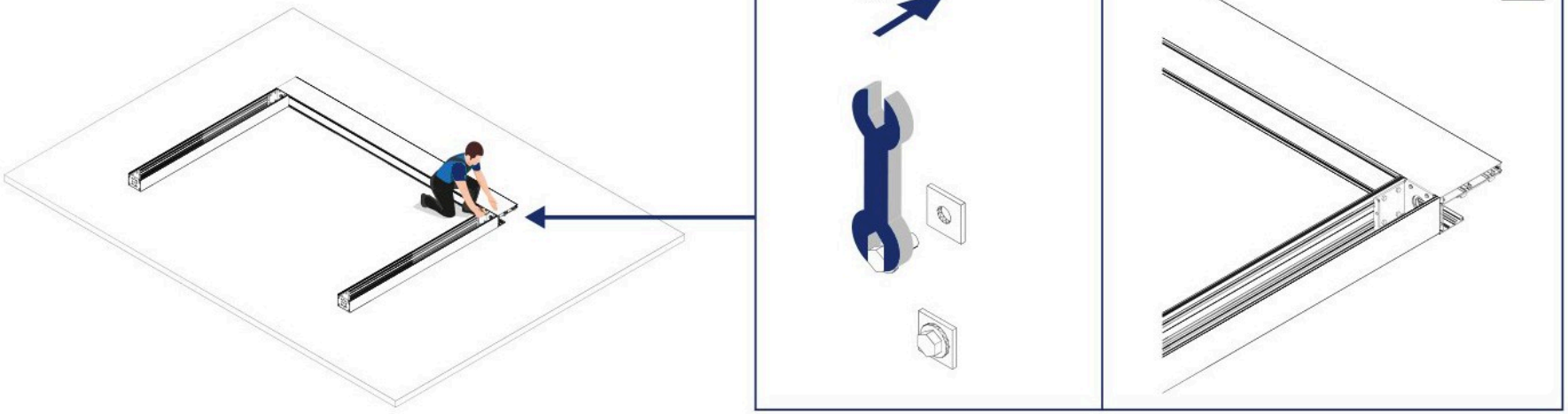

Step 1.3

In this step you join the
HP 11 pillars to the HP 21 gutter
with connector screws, using a wrench.
Lay the pillars parallel
on the ground.
Seat one long gutter into the cut-outs
at the top of the pillars and connect them
as shown. Do this for both
the front and back frames.
Then clip the HP 22 cap onto the HP 21
gutter as shown.

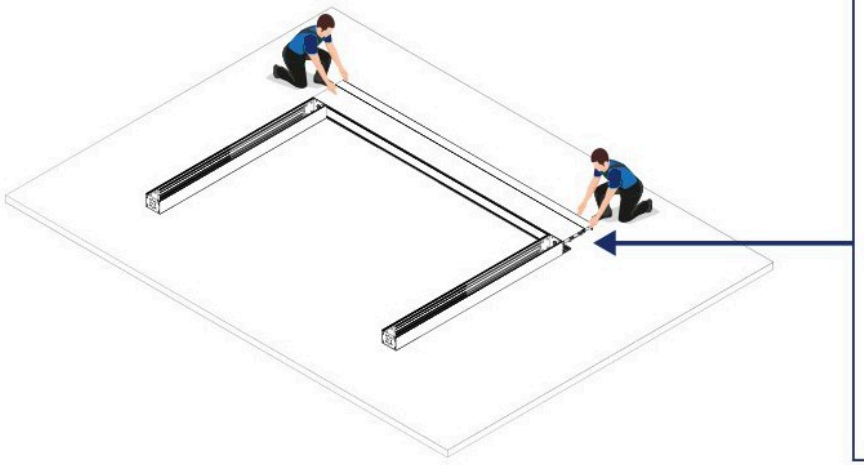

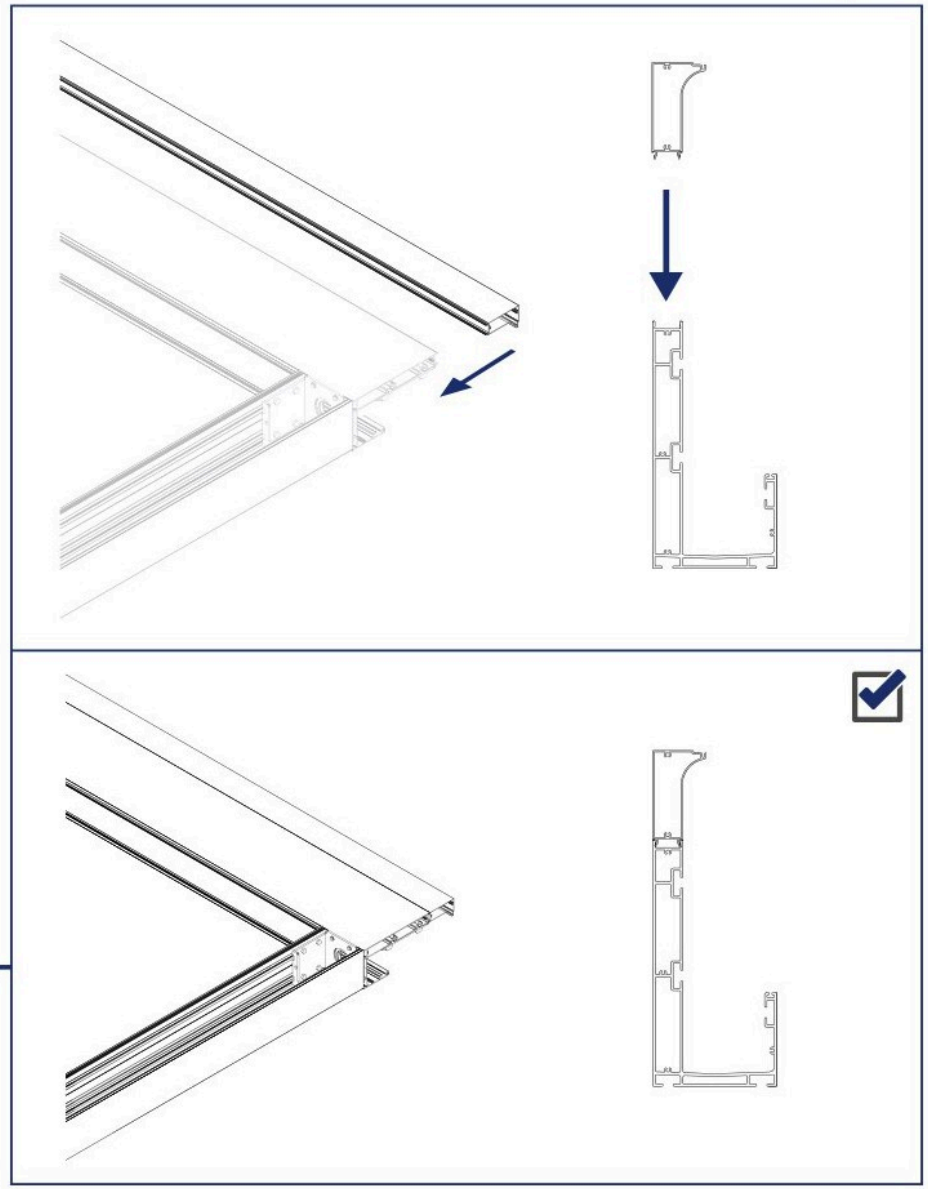

## Step 1.4

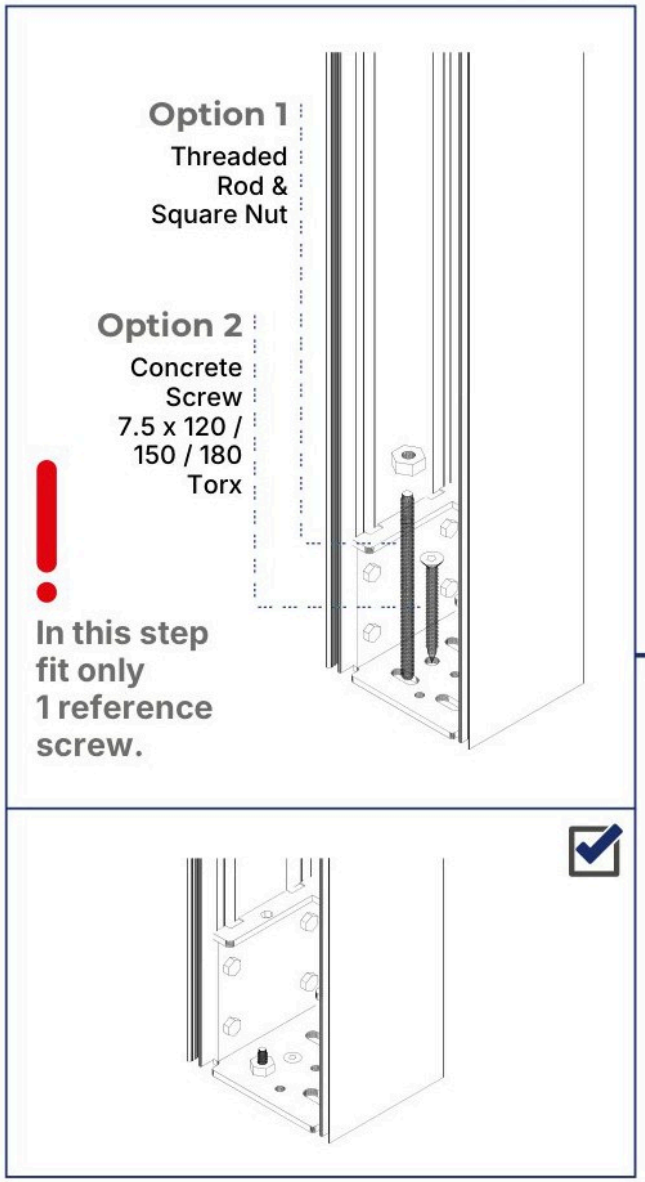


In this step you fix the pillars to the ground.
Stand the HP 11 pillars on the marked points and fix
**each one with ONLY 1 REFERENCE ANCHOR for now**
(the rest go in after the diagonal check). It takes at least two people to hold the pillar-gutter frame upright and one to fix the anchors. On concrete, concrete screws are enough. On soft ground, always use threaded rod set in a footing.

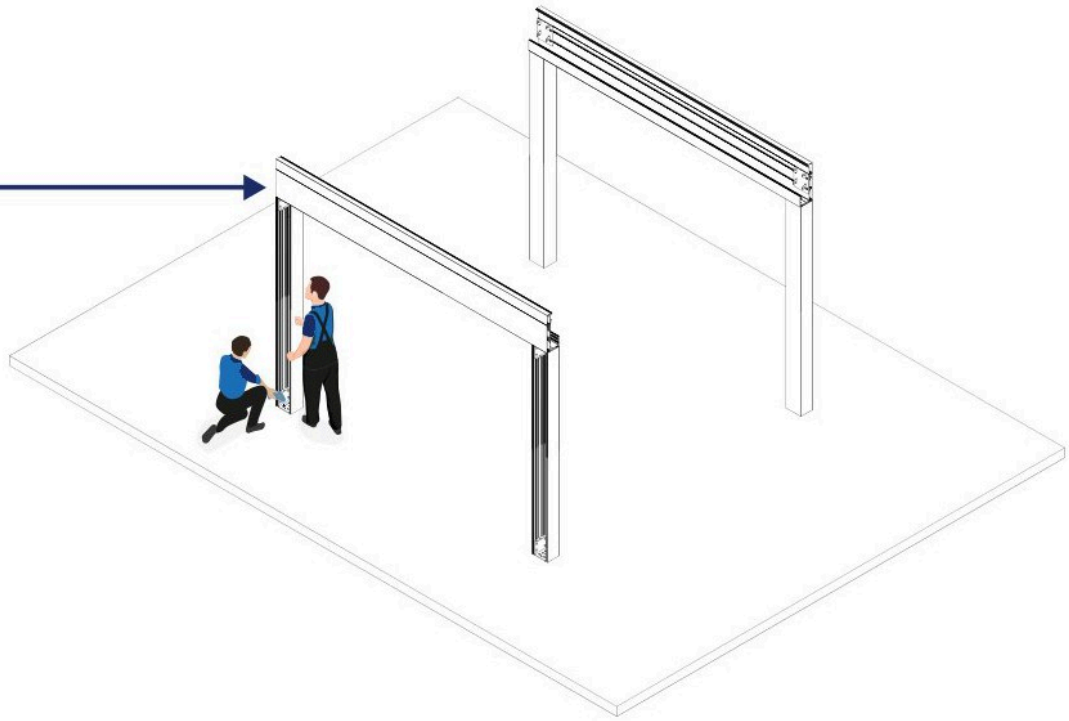

If the back pillars sit close to a wall
or other structure, the back pillars can be turned 180°
(tell us when ordering; your system is made this way).
This matters for the
later steps of the installation.

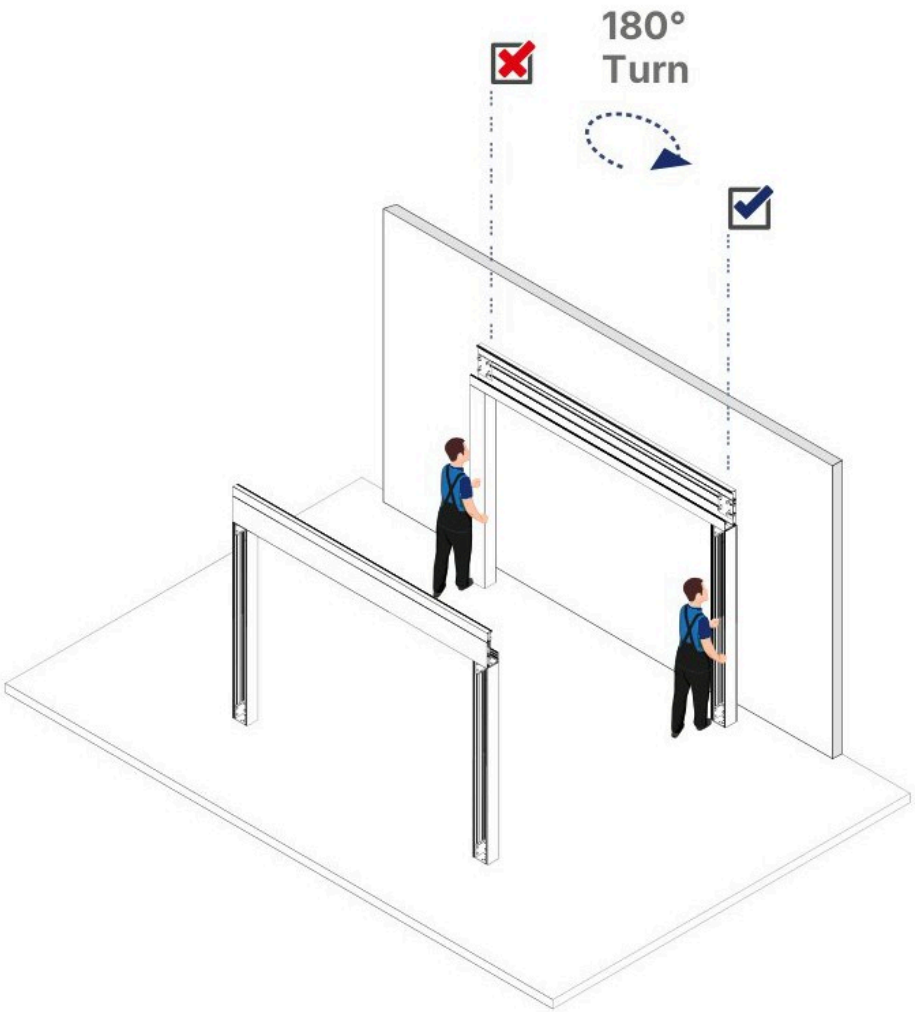


SPECIAL PROJECTS - FOR INFORMATION

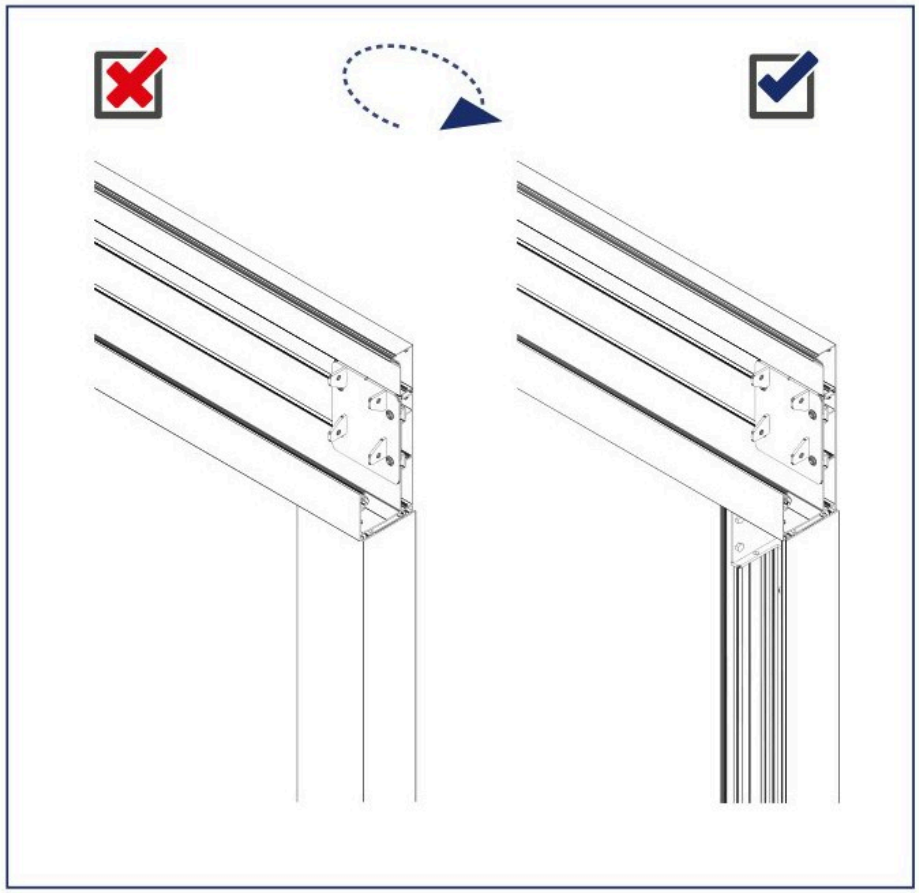

SPECIAL PROJECTS - FOR INFORMATION

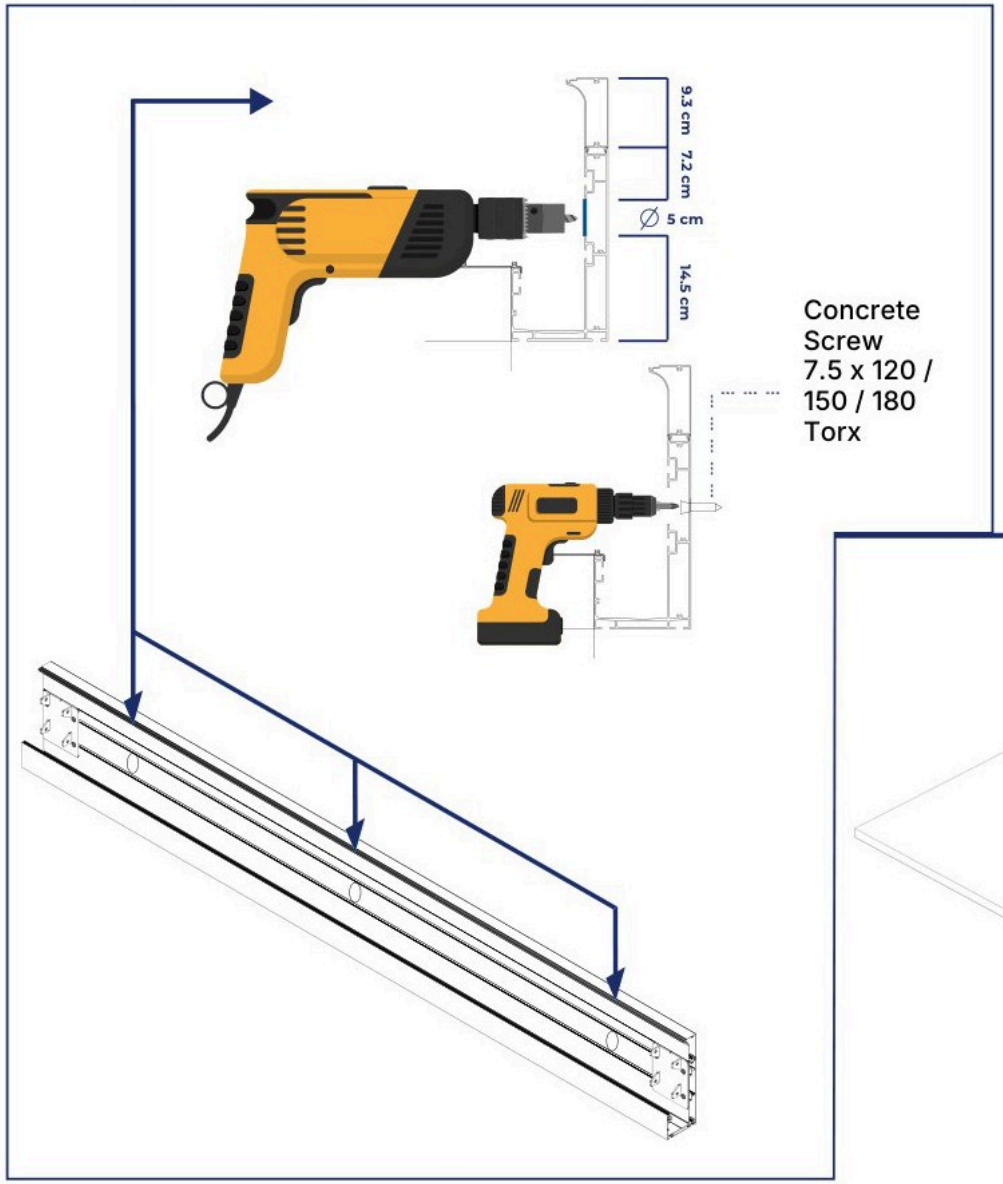


If your Haven Pro is wall-mounted, this step is for you. After fixing the front pillars, fix the HP 21 back gutter to the wall before moving on. Use concrete screws at 3 or 4 points to fix it to the wall, as shown.

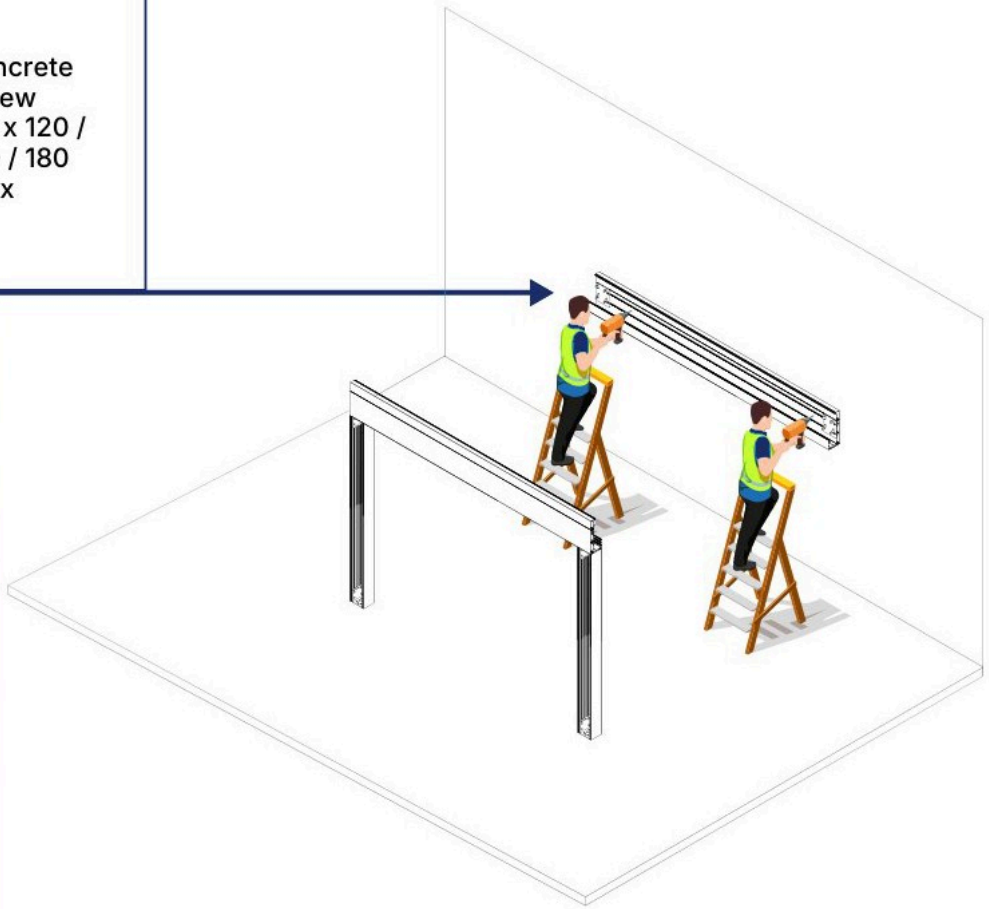

Gutter profiles ship without drain holes. Choose the drain pillars from your project plan. Once the pillars and gutters are assembled, drill each hole with a diamond core bit (Ø 5 cm) as shown.

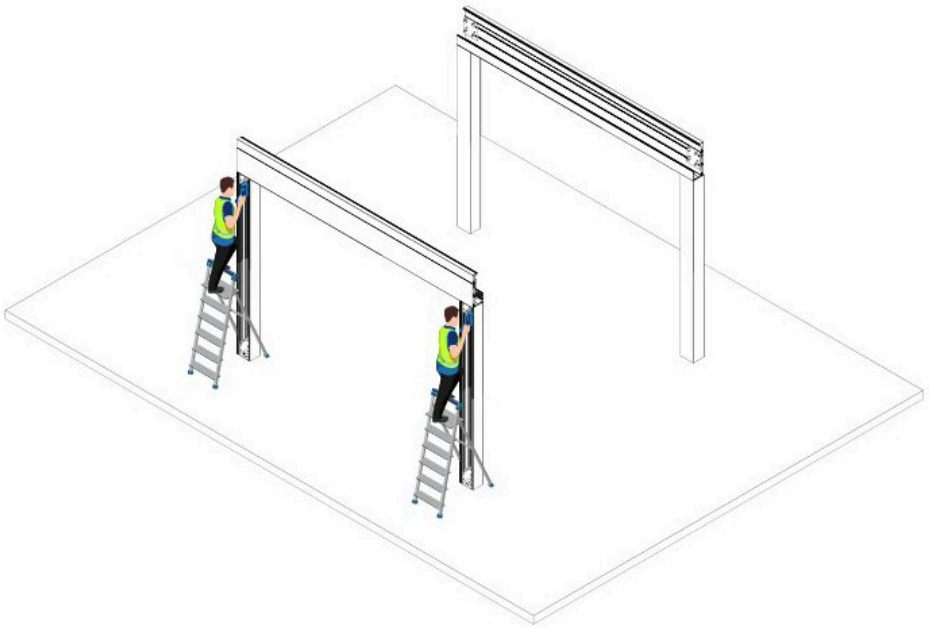

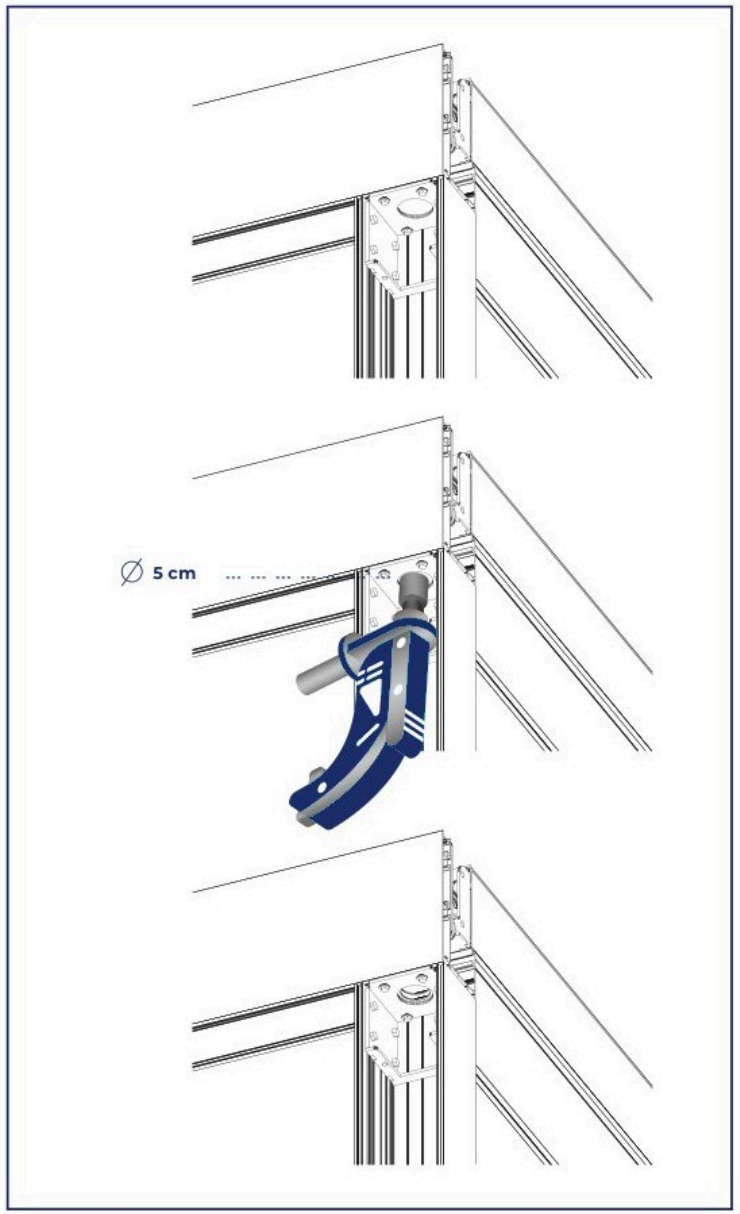

## Step 2.1

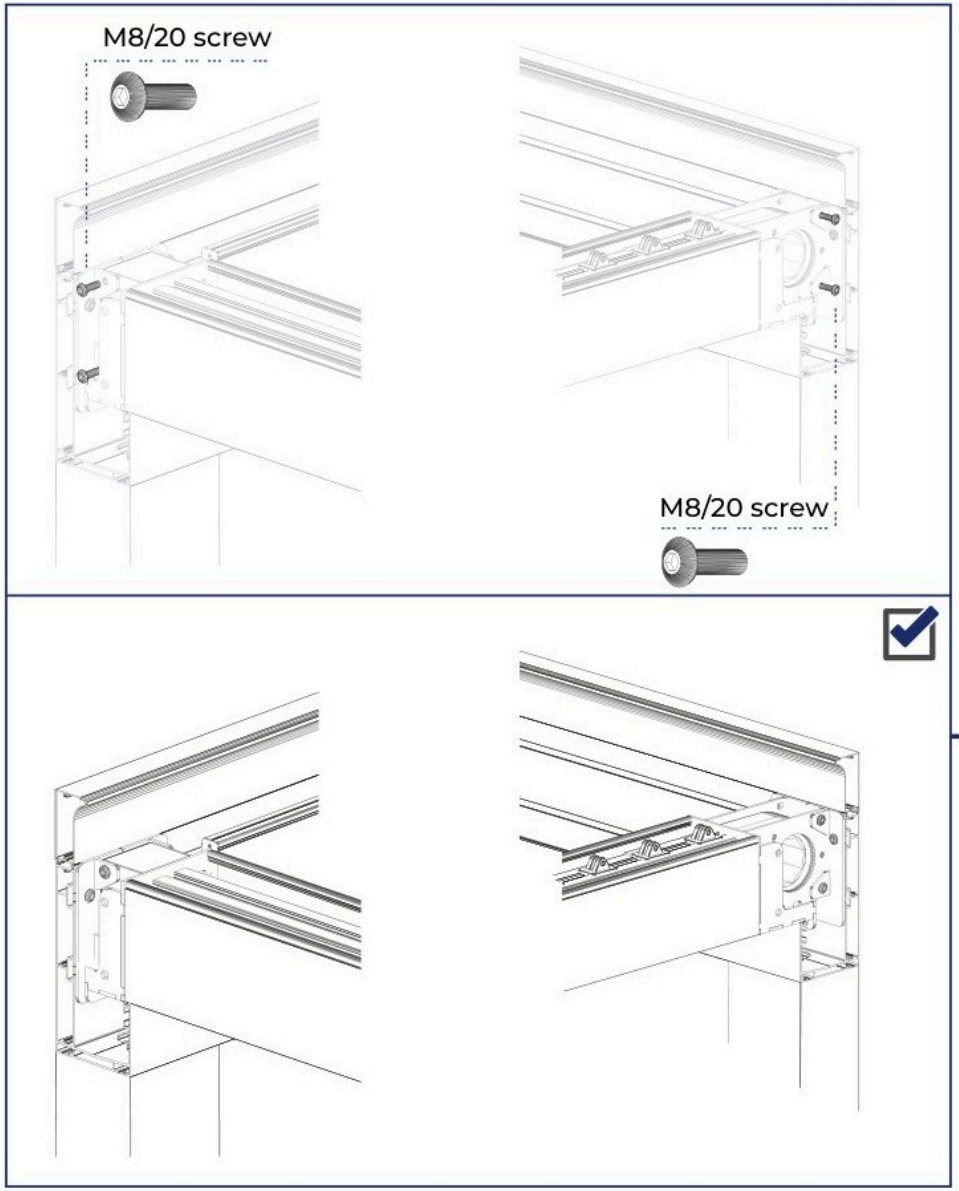


In this step you connect the HP 31 rails to the front and back HP 21 gutters. Use a hex key and M8/20 screws. This step needs at least four people.

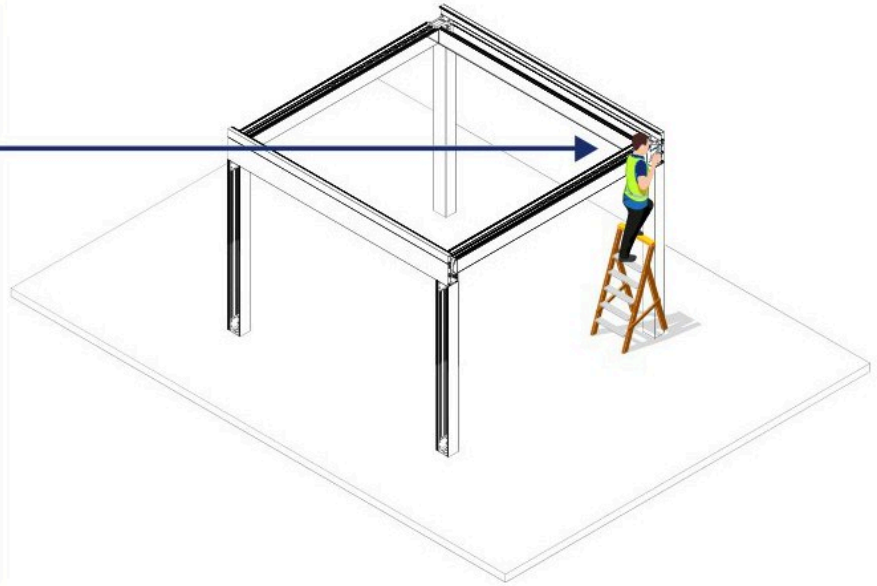

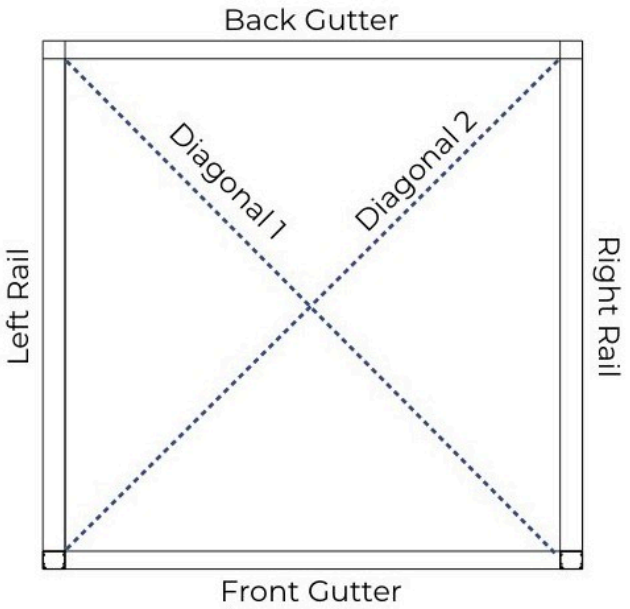


Step 2.2

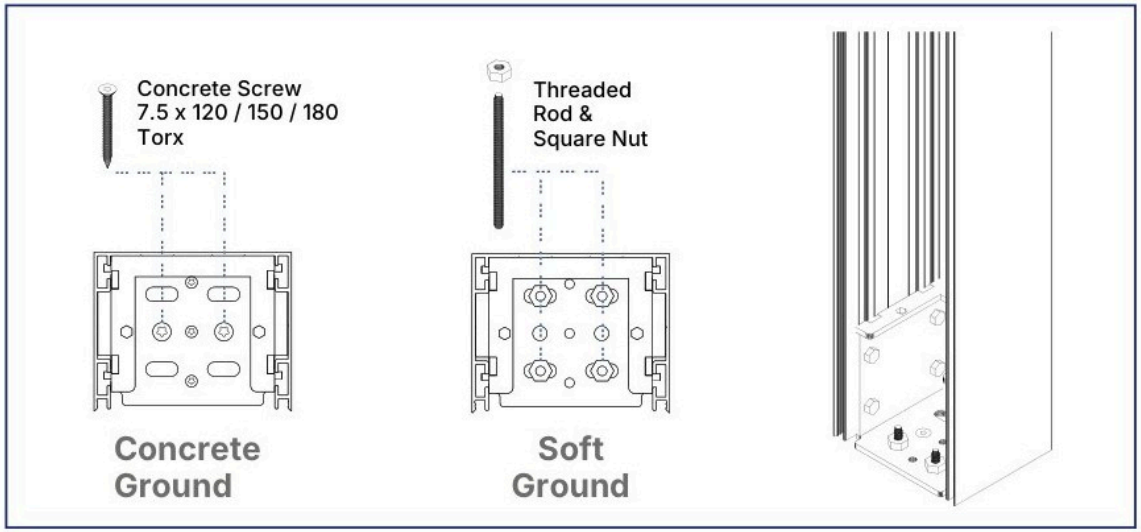


**In this step, check the dimensions again. The two diagonals of the frame must be equal. When every dimension is correct, install all the remaining anchors for the pillars.**

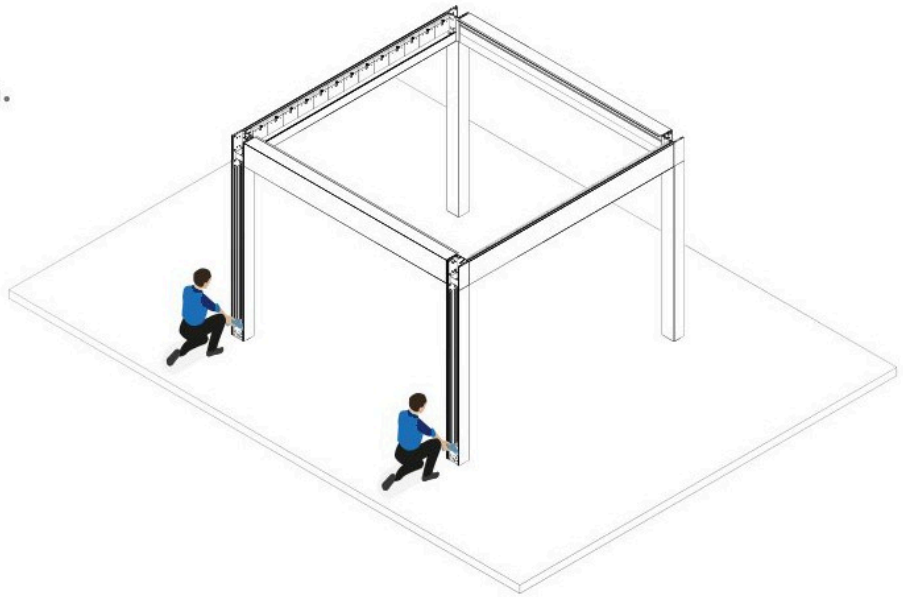

Step 2.3

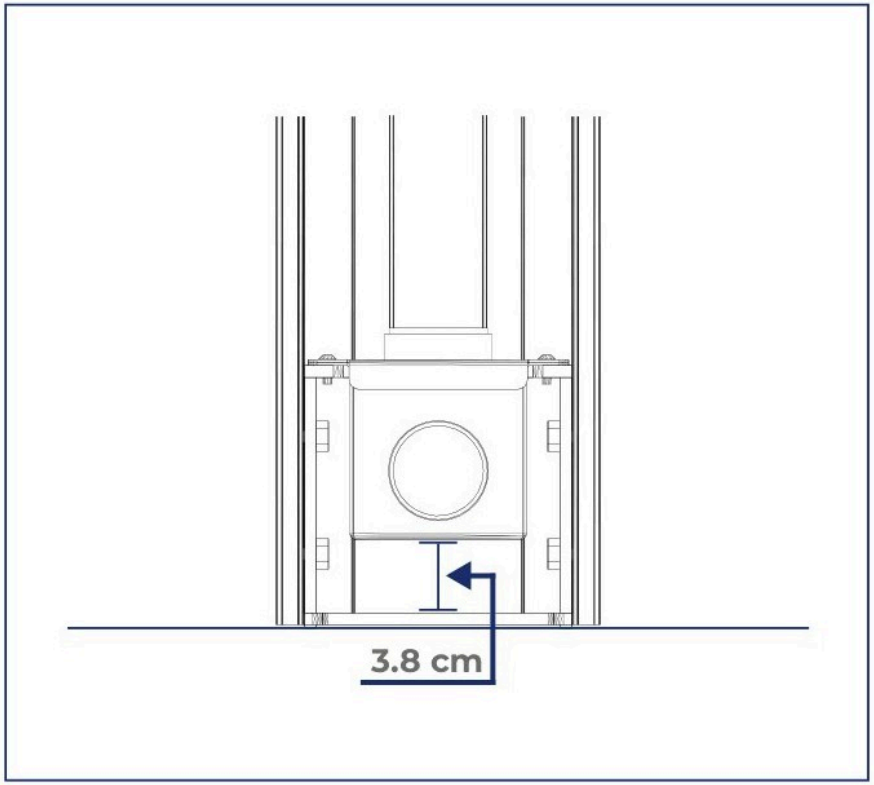


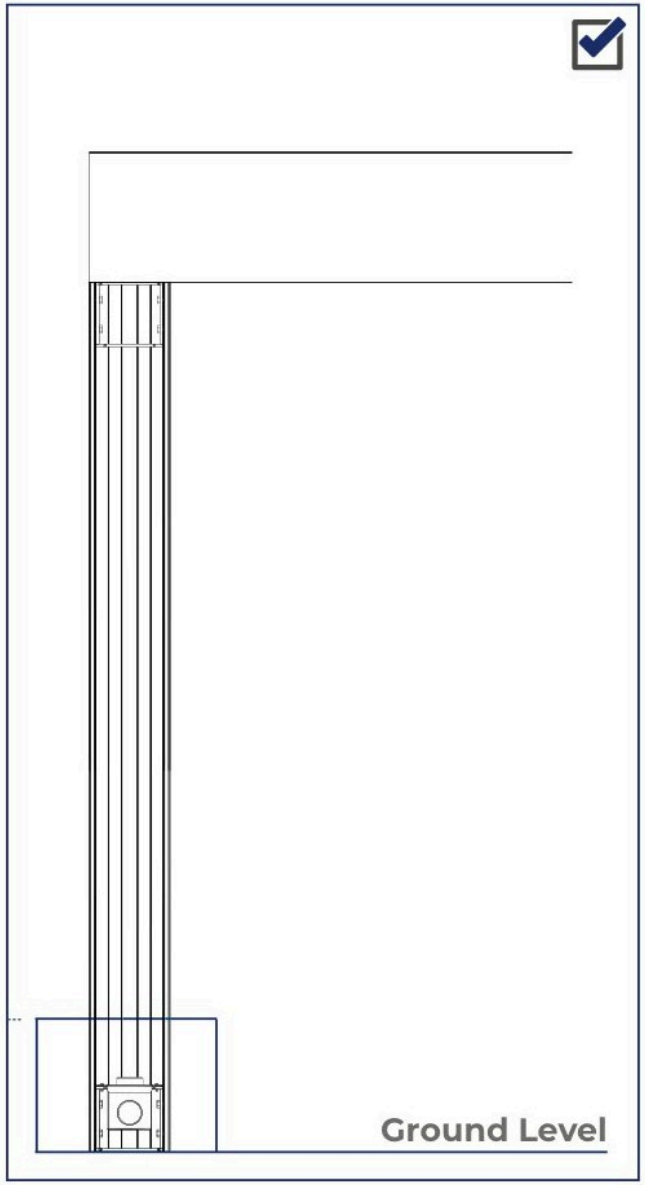


Before going on, check that with the water box fitted there is exactly 3.8 cm clear between the bottom of the pillar and the water box. When every dimension is correct, install all the remaining pillar anchors.

## Step 2.4

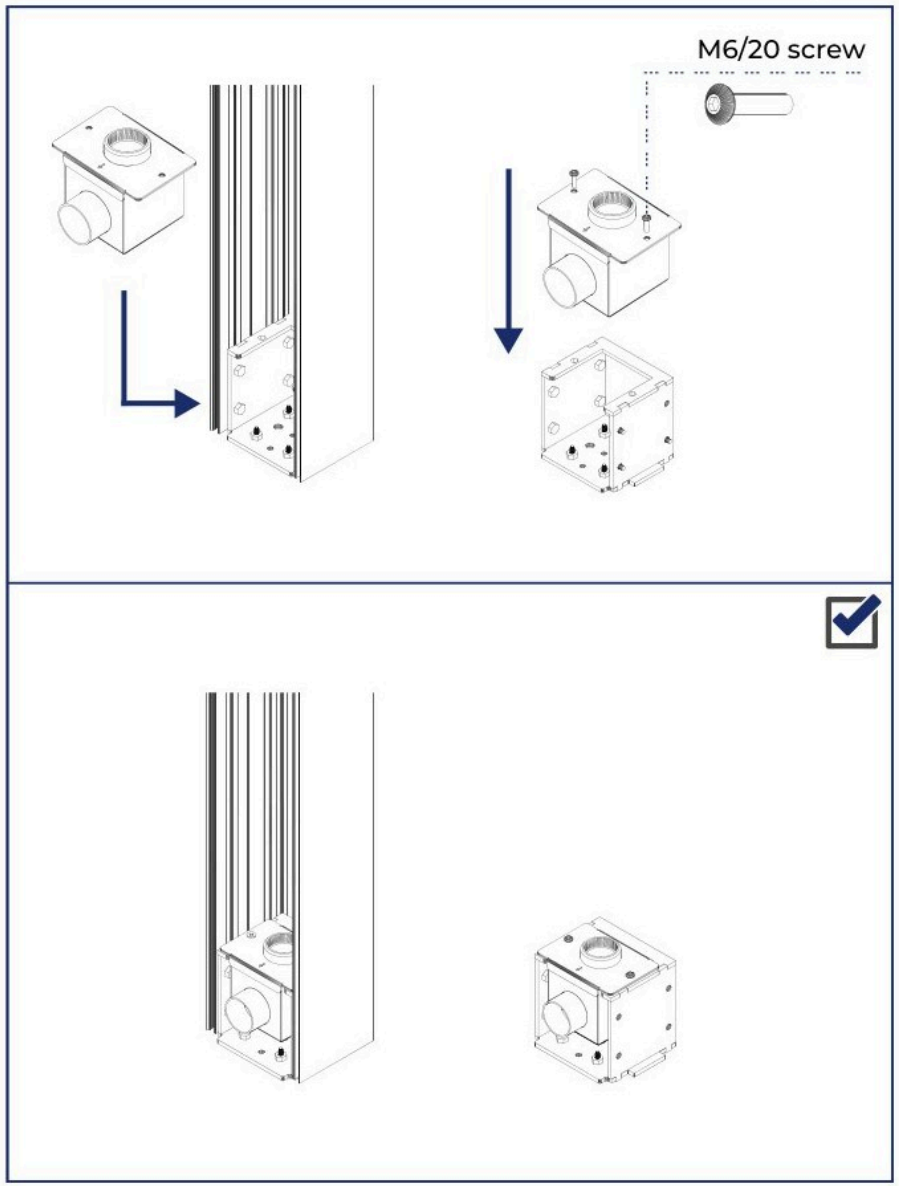


In this step you fit the water outlet. This is the small HP 14 box with its own cap with a hole. Fix the water box with M6/20 Allen-head screws using a hex key.

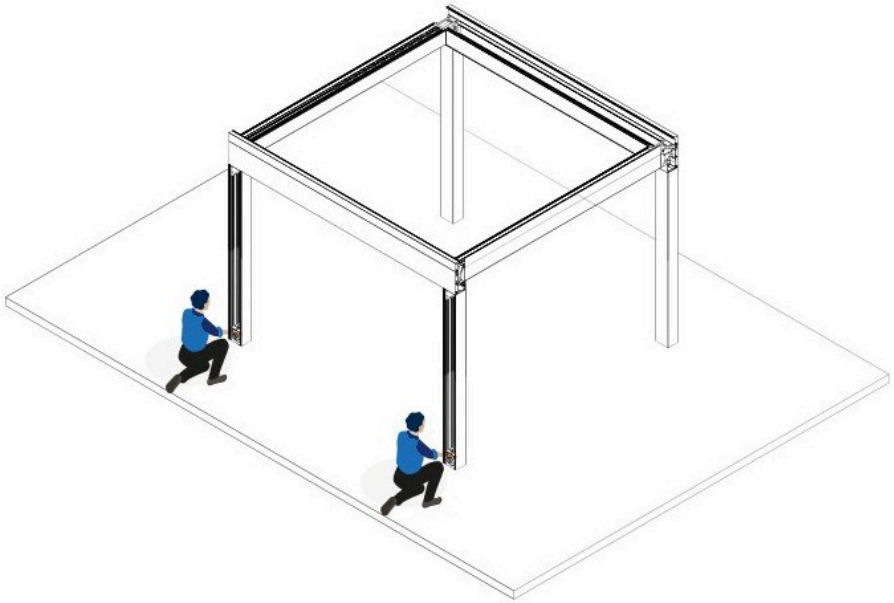

Step 2.5

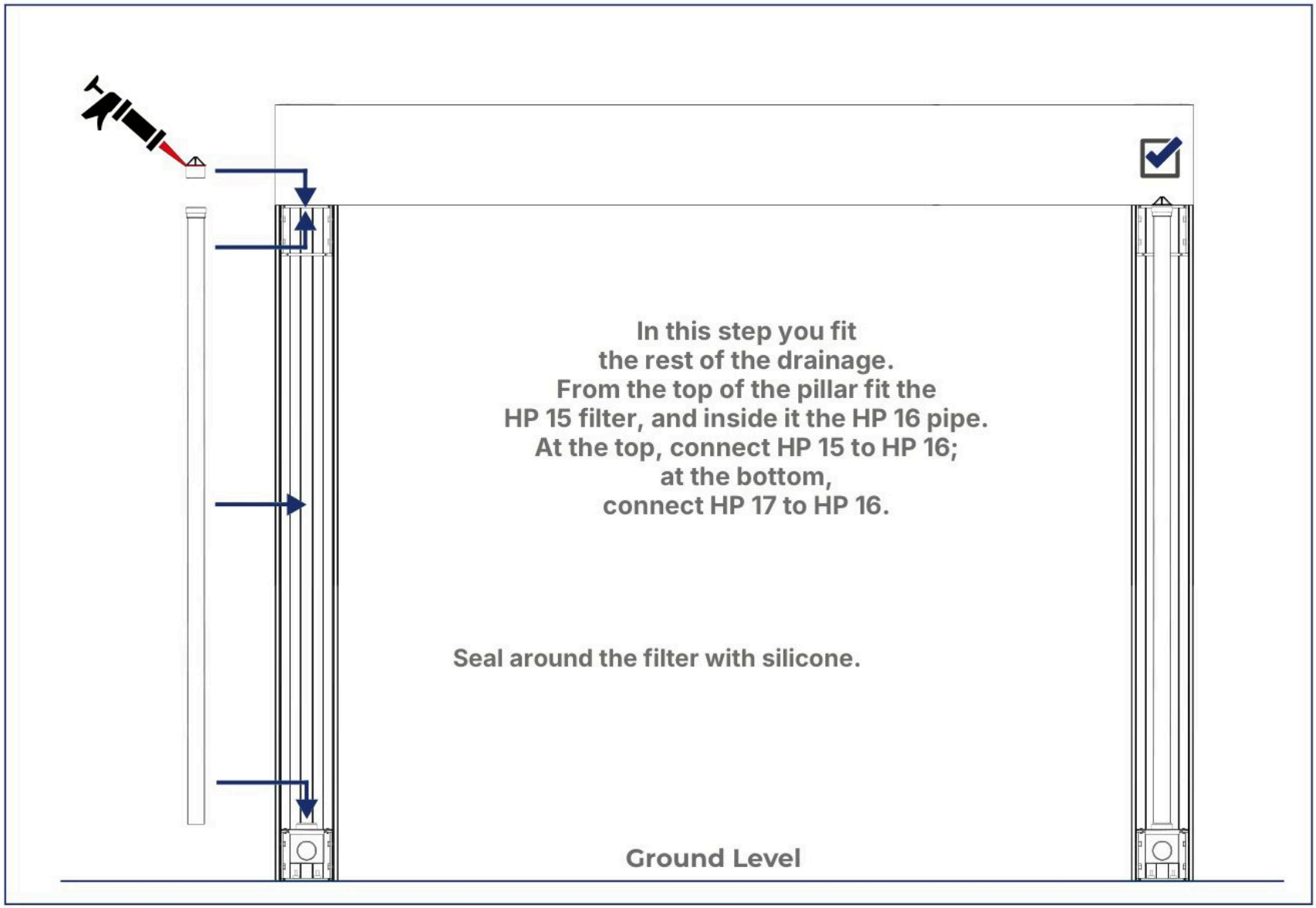
In this step you fit
the rest of the drainage.
From the top of the pillar fit the
HP 15 filter, and inside it the HP 16 pipe.
At the top, connect HP 15 to HP 16;
at the bottom,
connect HP 17 to HP 16.
Seal around the filter with silicone.
Ground Level

## Step 3.1

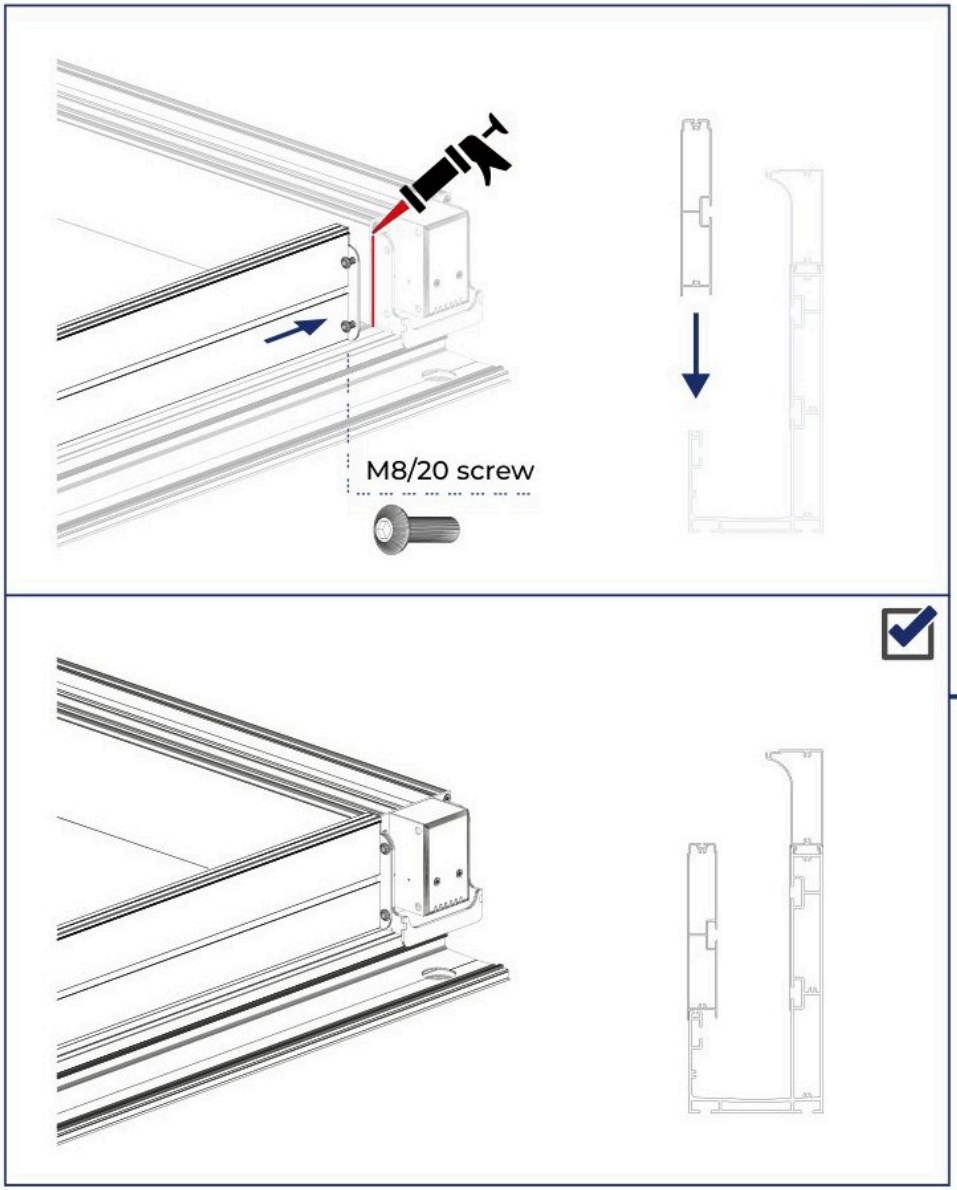


In this step you fit the HP 41 front traverse profile inside the front gutter. The left picture shows the front side and the right picture the back side of the profile. Fix it with M8/20 screws and a hex key.

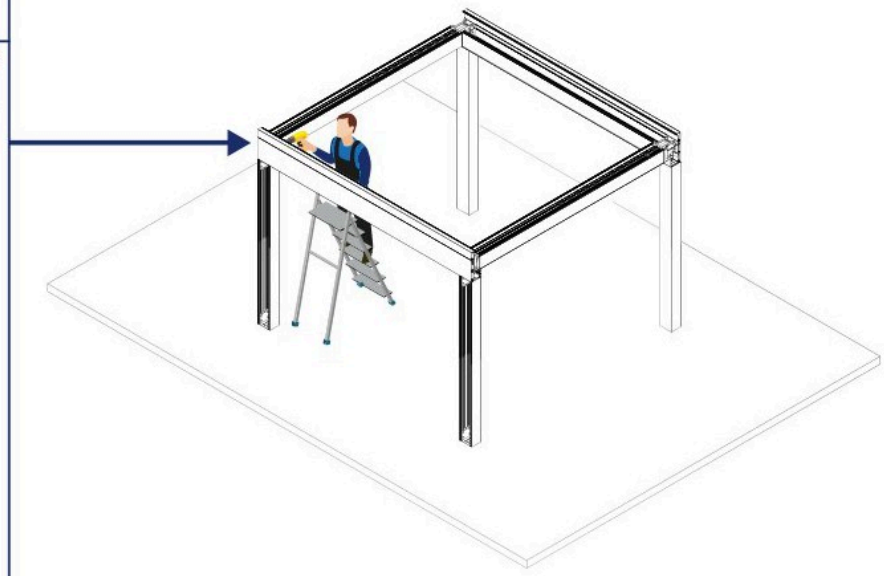

## Step 3.2

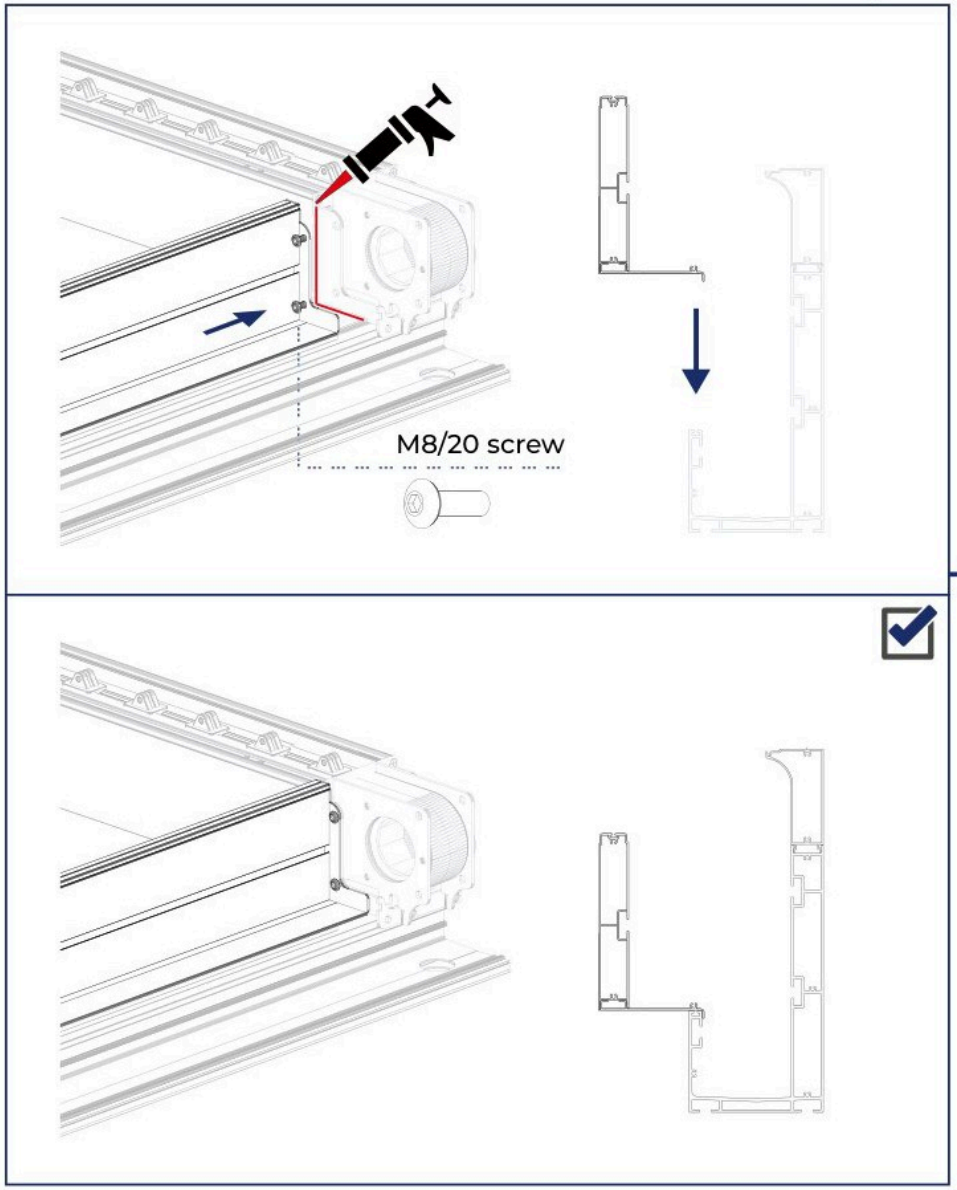


In this step you fit the HP 42 back traverse profile inside the back gutter. The left picture shows the front side and the right picture the back side of the profile. Fix it with M8/20 screws and a hex key.

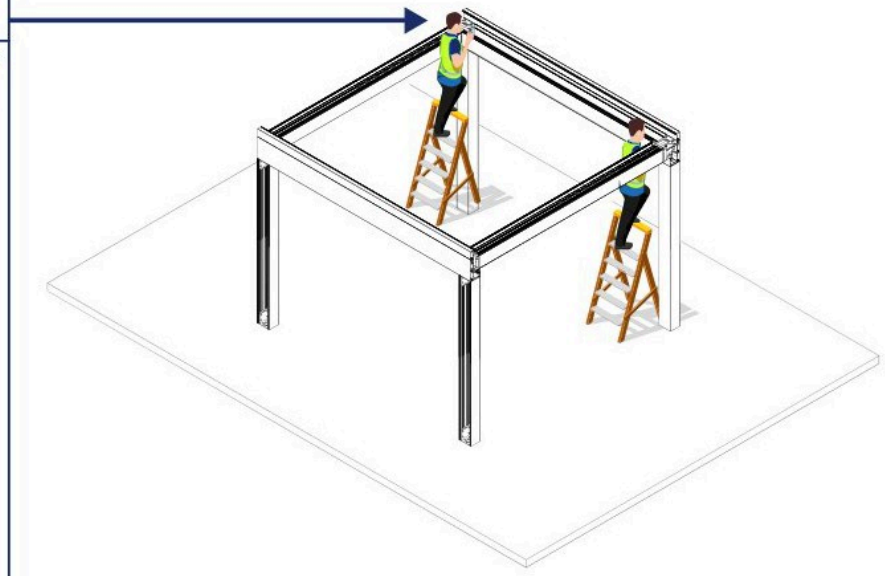

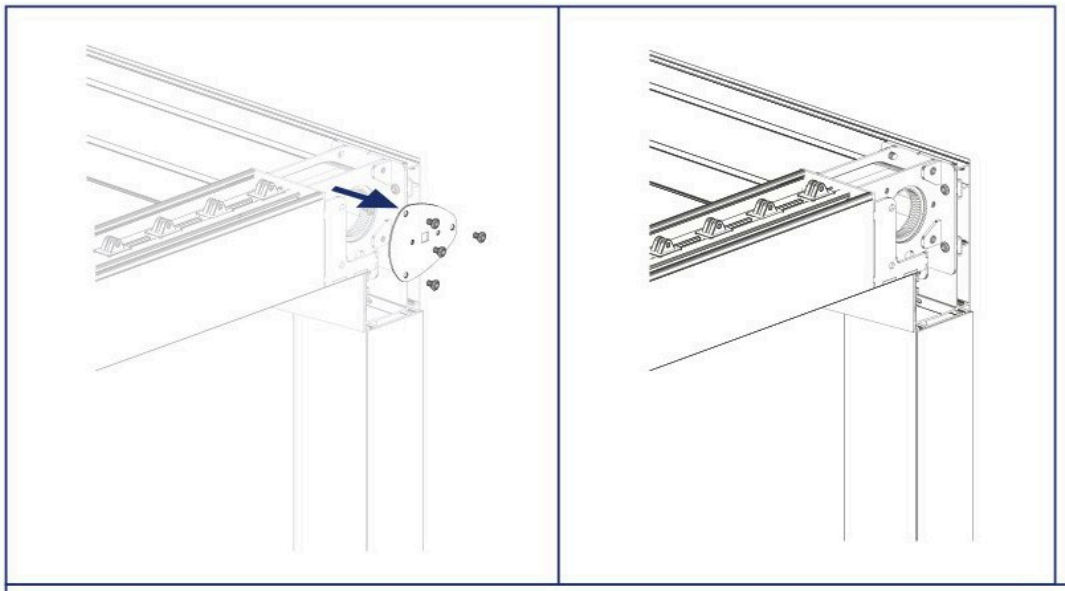



In this step you fit the Haven Pro motor. First remove the rail side cover: undo its screws with a hex key. Then slide in the 70 mm motor tube.

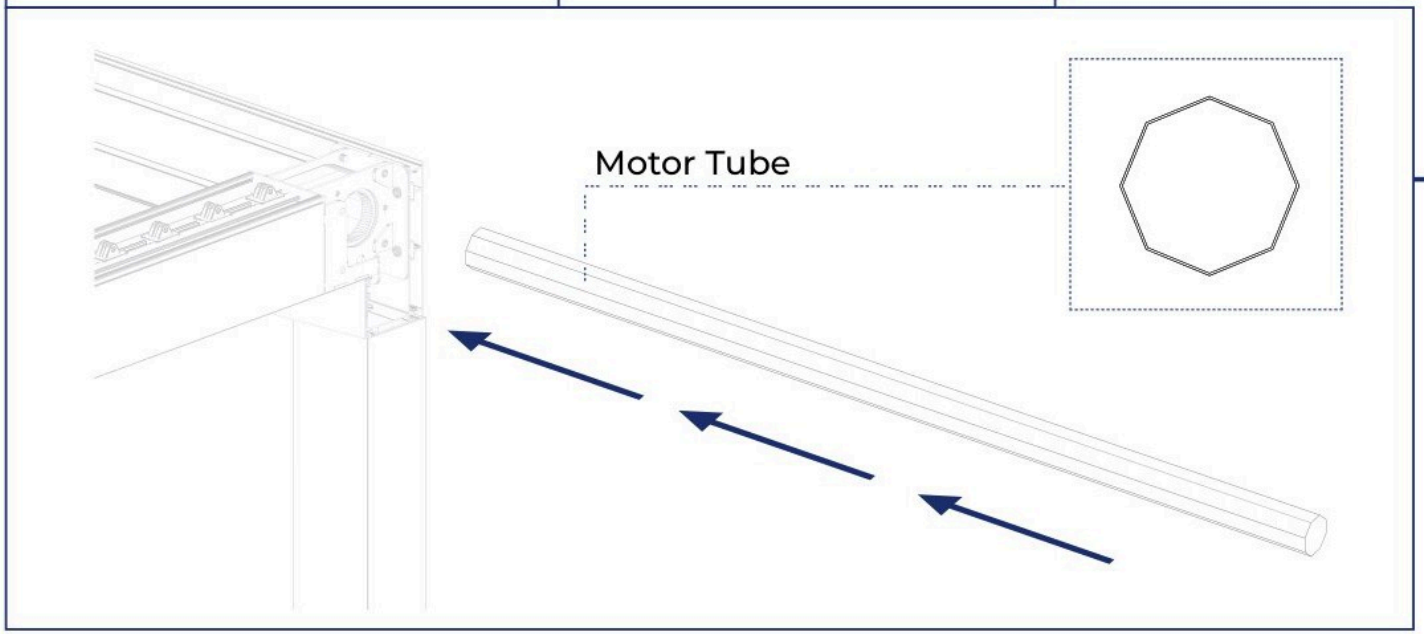

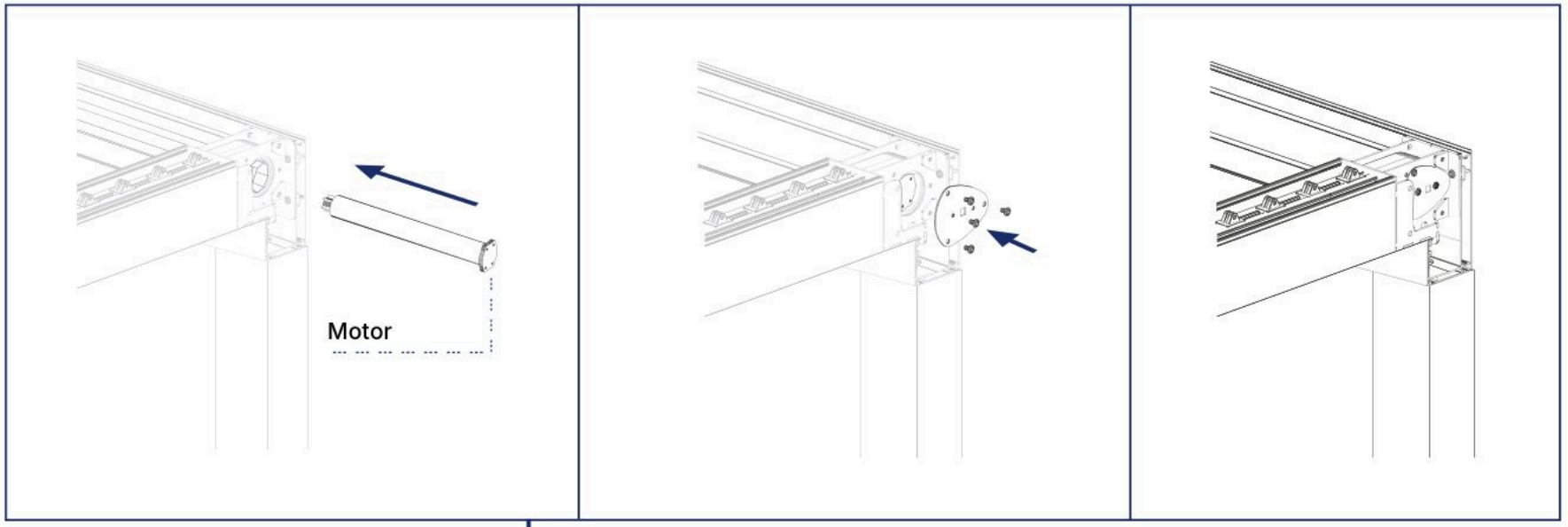


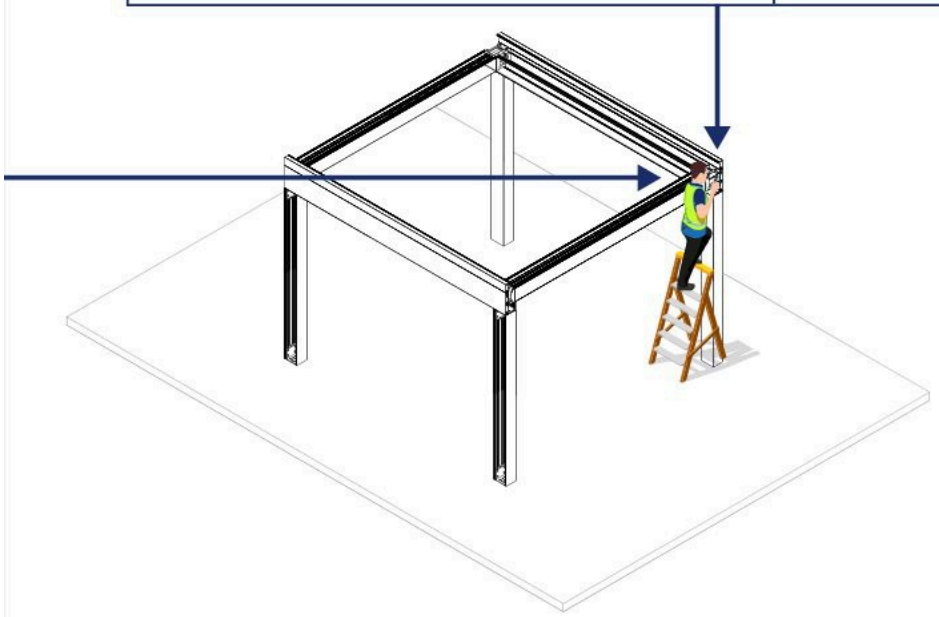

When the motor tube is in, slide the HP 52 motor into the HP 51 motor tube, fit the tube inside the gutter as shown in the right picture, then refit the cover you removed first.

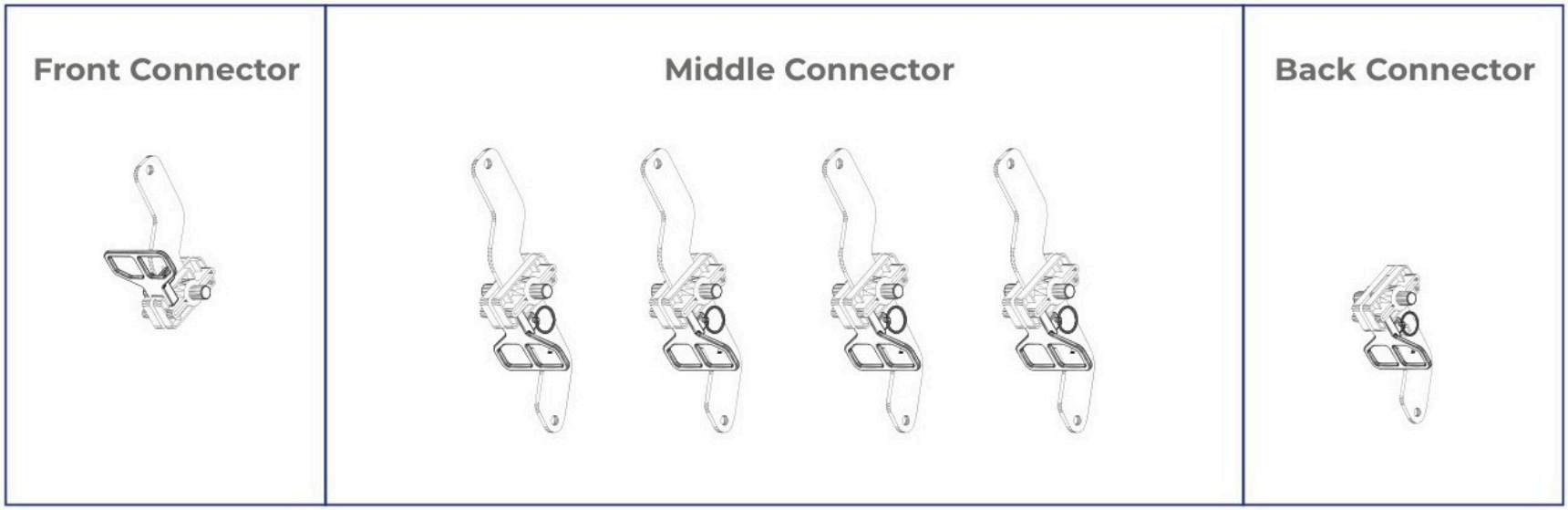


Remove the pin and the brown plastic part as shown above

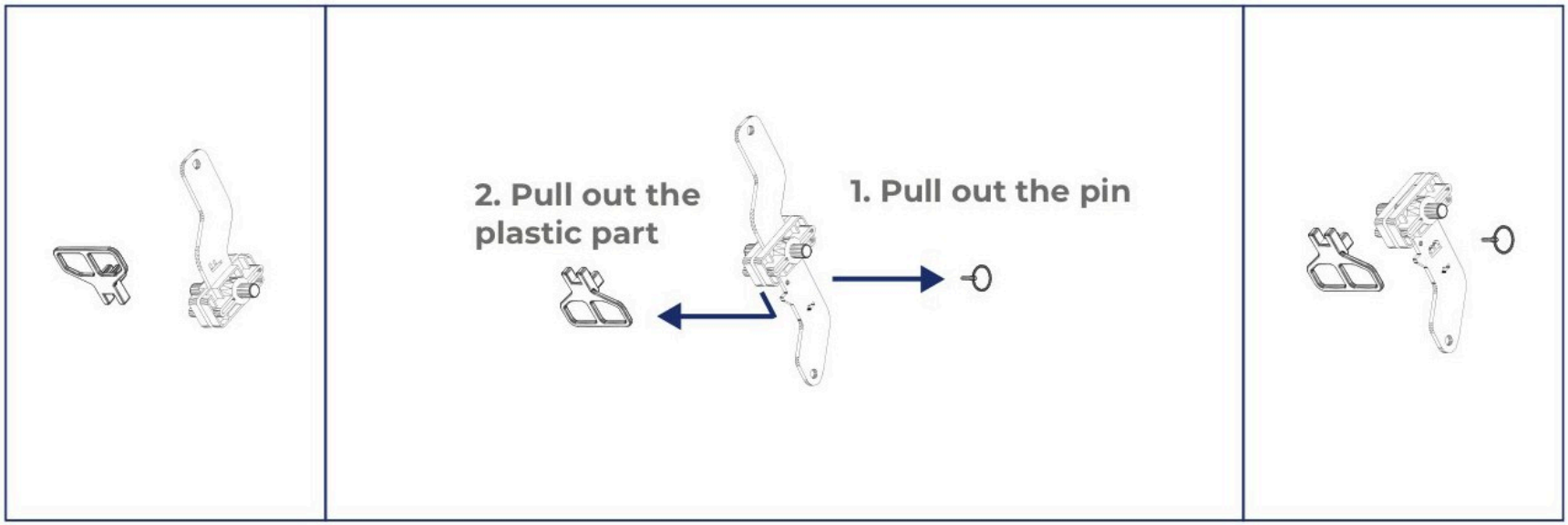



### 1. Front Main Car

The main car, already fixed to the rail belt. The other cars connect to it and move with it, front and back.



### 2. Standard Middle Car

The small car. Not fixed to anything, so it moves easily front and back during installation.



### 3. Back Fixed Car

Same type as the middle cars, with an extra side part and screws that fix it to the rail.
It cannot move front or back.



### 4. Standard Back Car

Same type as the middle cars.
It moves only in the area behind the back fixed car.

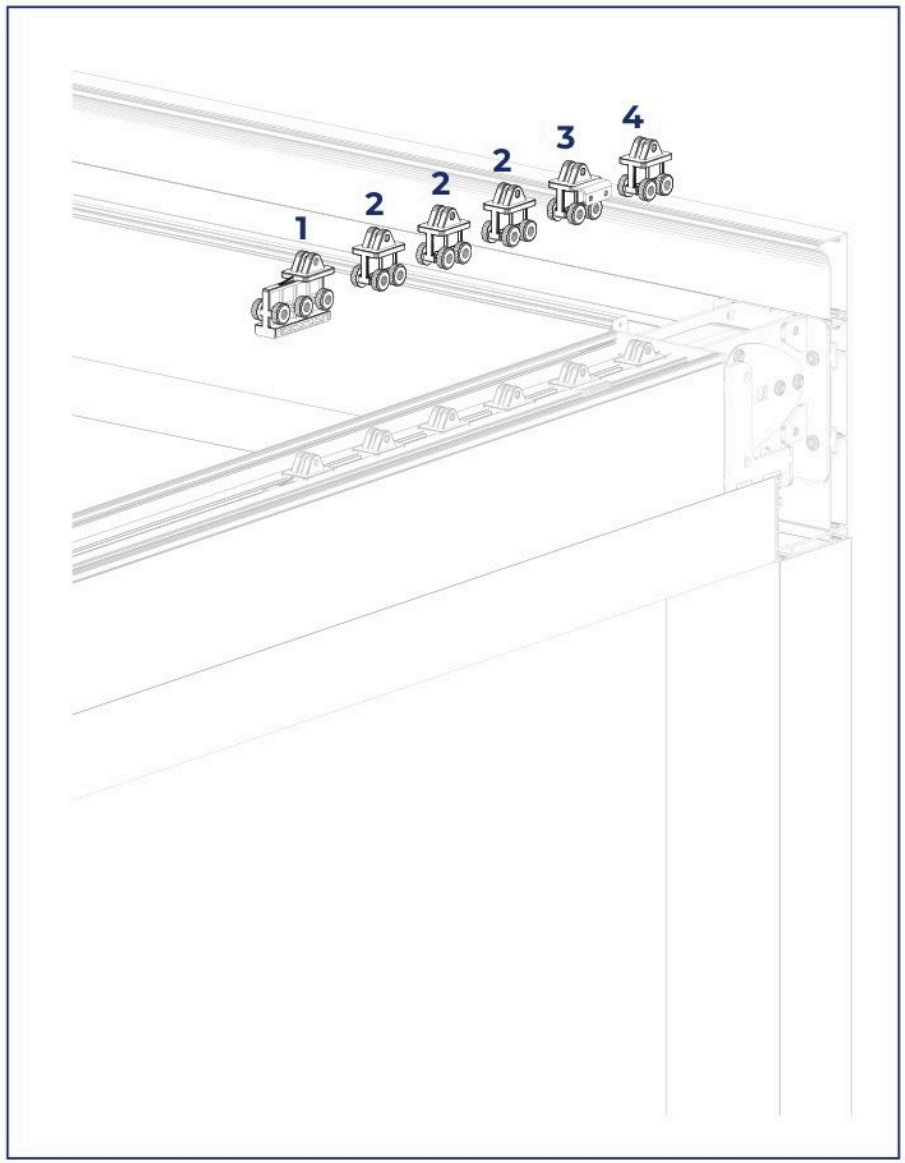

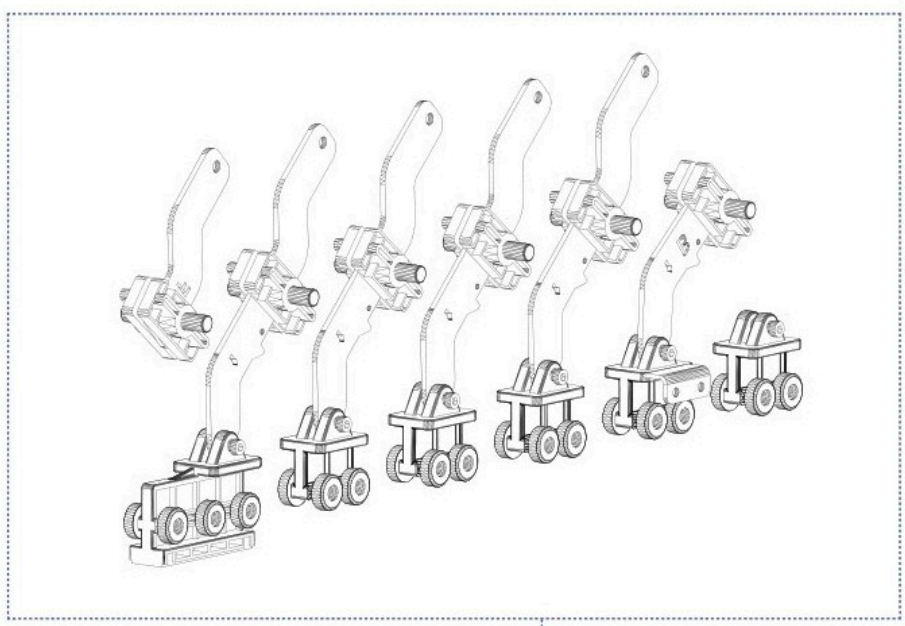

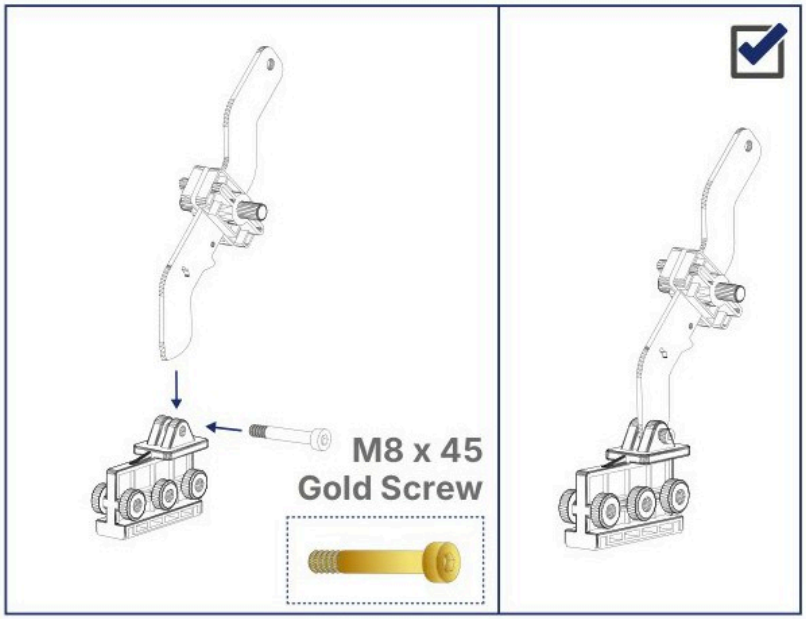


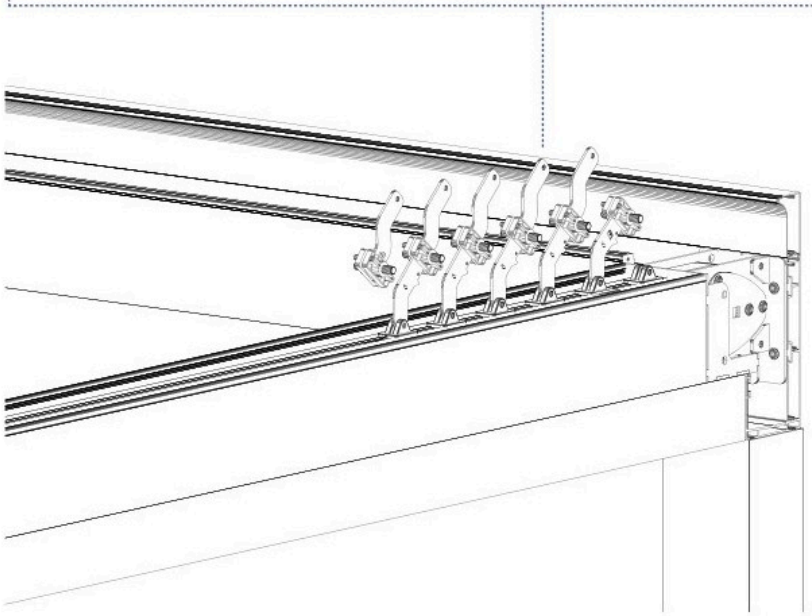

In this step you fit the roof panels. The example shows a 6-panel system. The panel cars ship already fitted on the rail. The second car from the back is fixed (does not move). The first and last cars need no panel connectors. All middle connectors are the same shape. The first connector is marked F, the last connector is marked B.

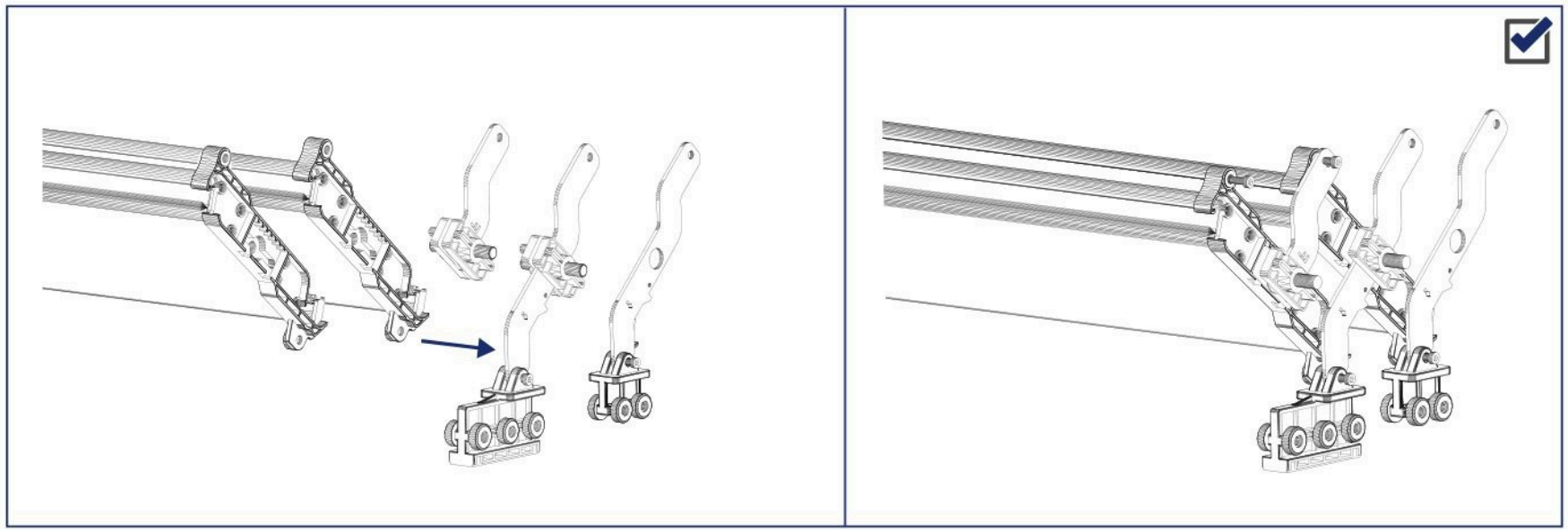

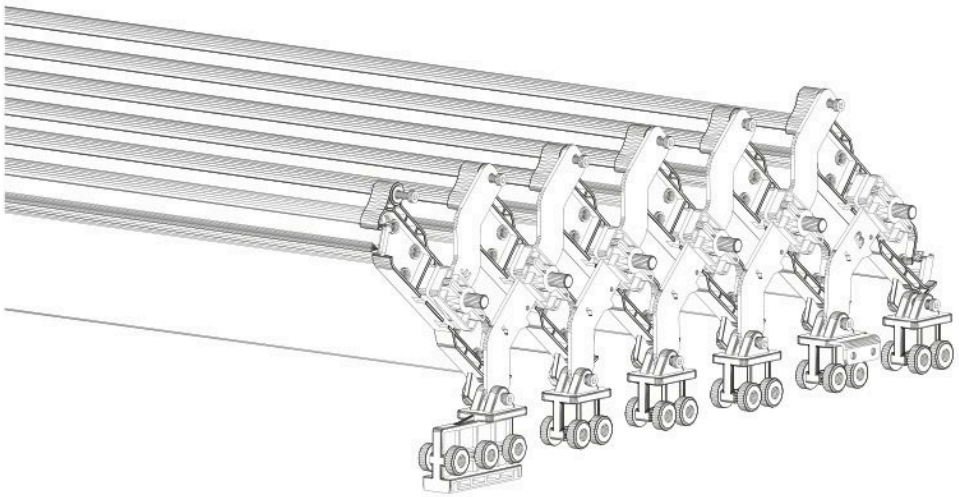

Connect the panels (HP 61) from the inside of the metal connectors as shown in the picture.

## Step 3.5

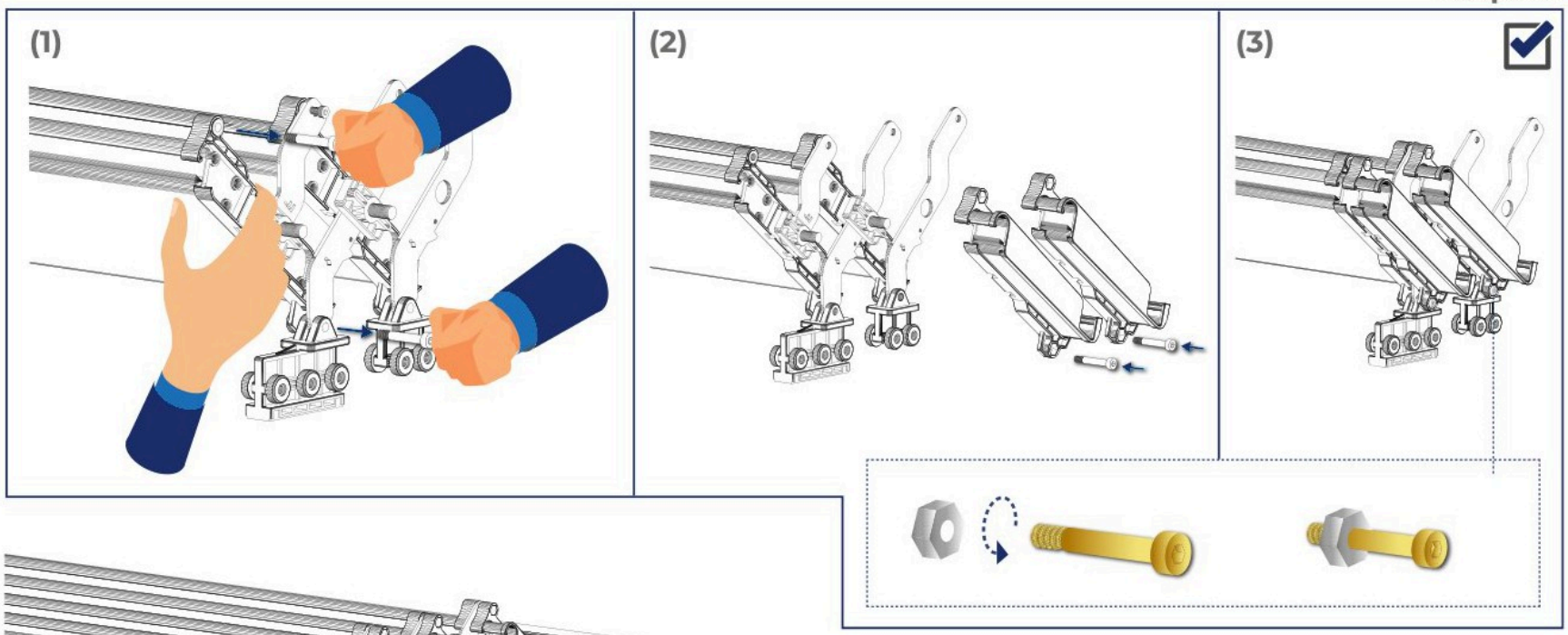


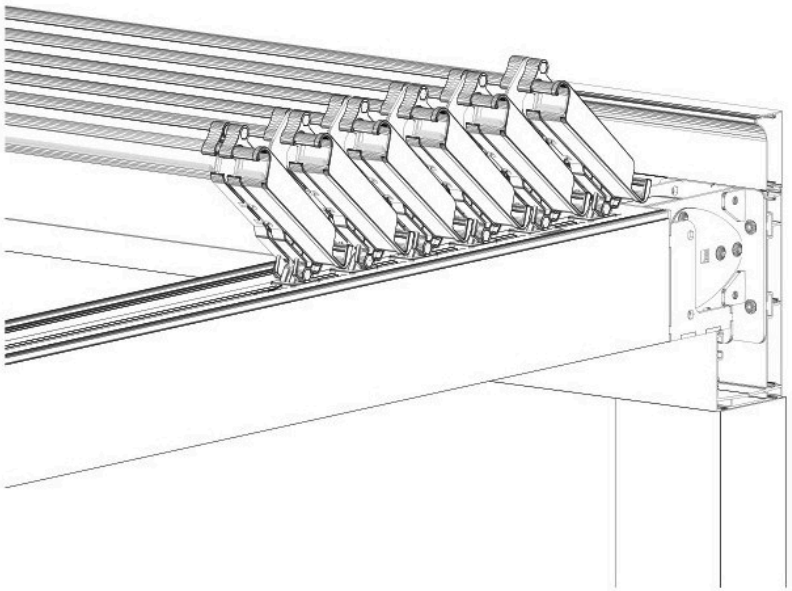

**(1)** Hold the connector and panel together by hand. Remove the M8 x 45 gold screw fitted in the previous step.

**(2)** Fit side cap HP 62 on each panel. Refit the M8 x 45 gold screw in its place.

**(3)** Finally, fit the nuts on the M8 x 45 screws

## WIDE SYSTEMS !

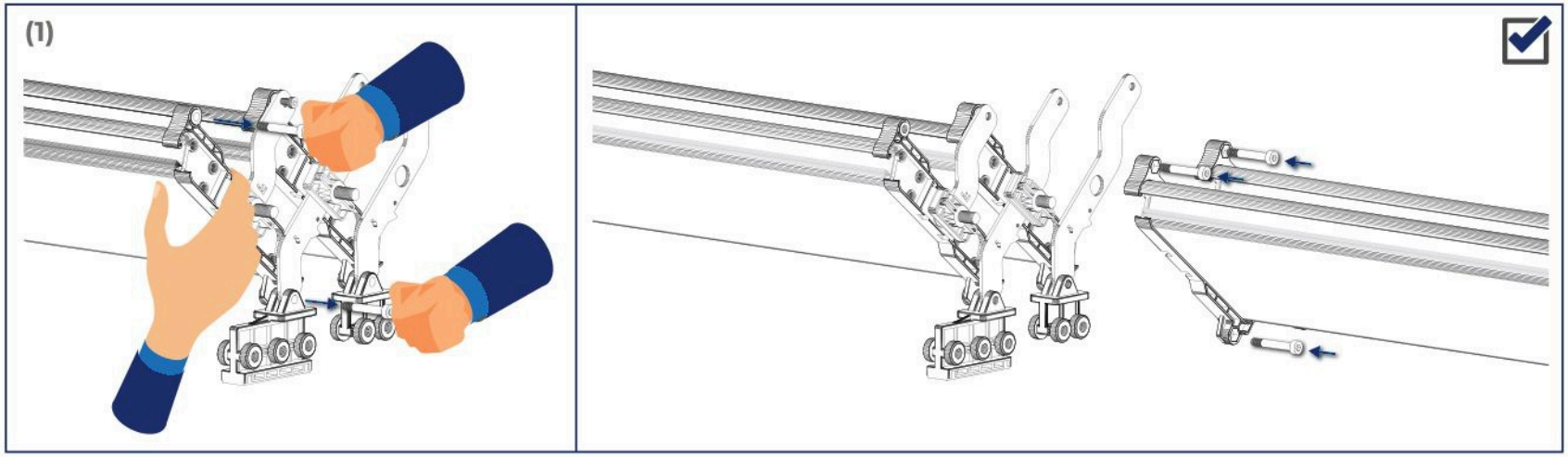


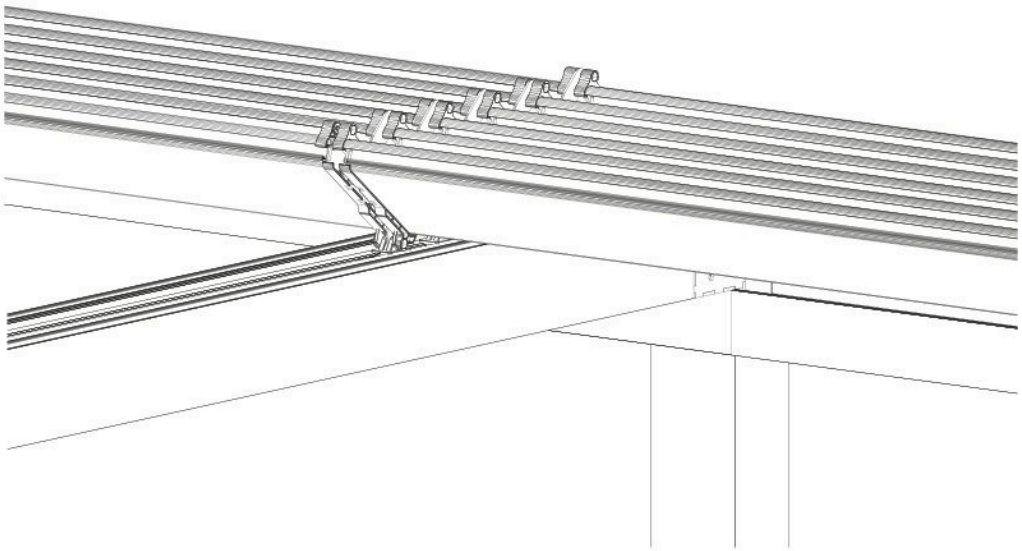

Wider systems have middle rails.
On the middle rail connectors,
fit panels on both sides,
as shown in the picture.

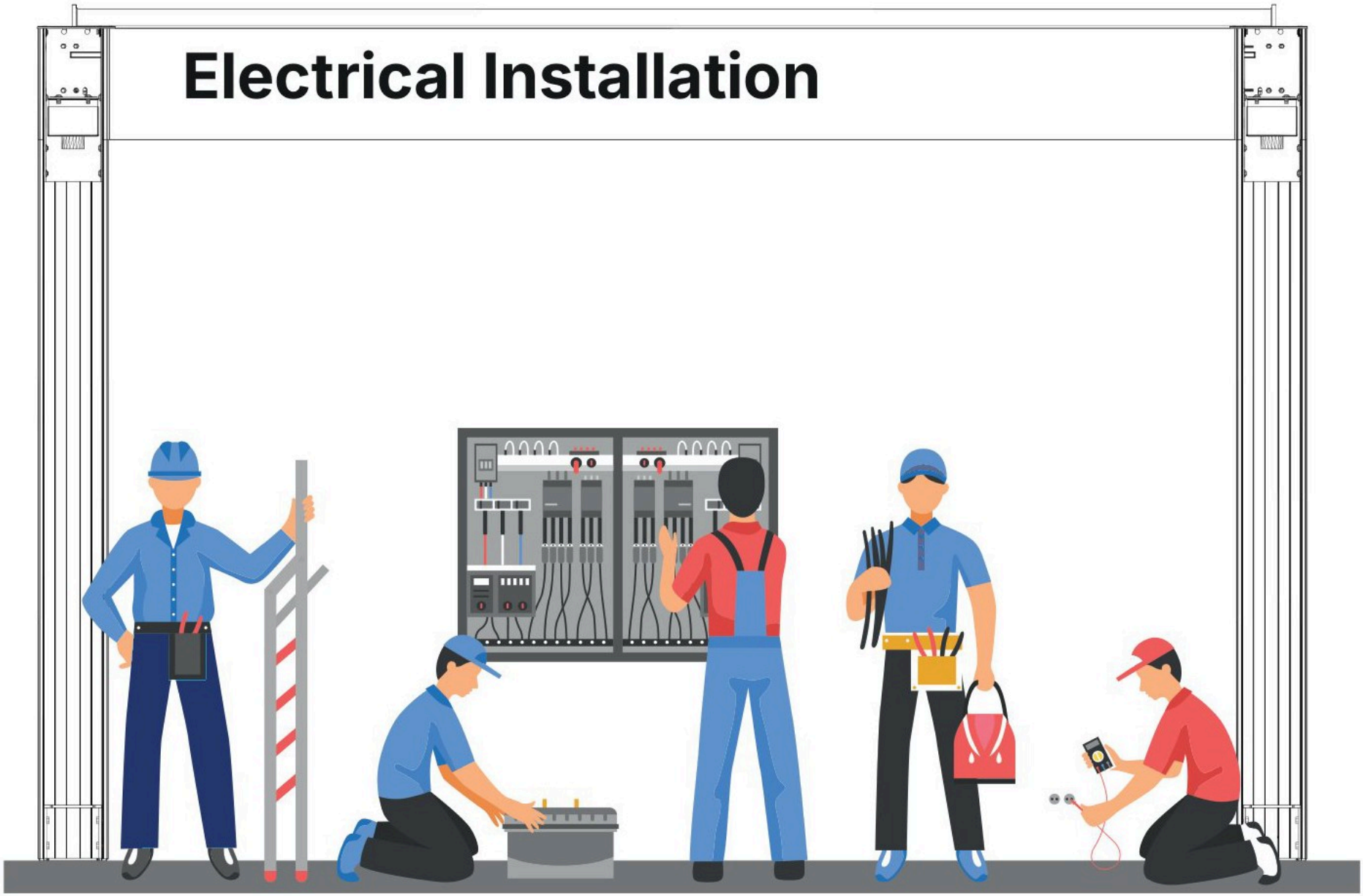
Electrical Installation

# Motor Details & Installation

## Motor Cross Section

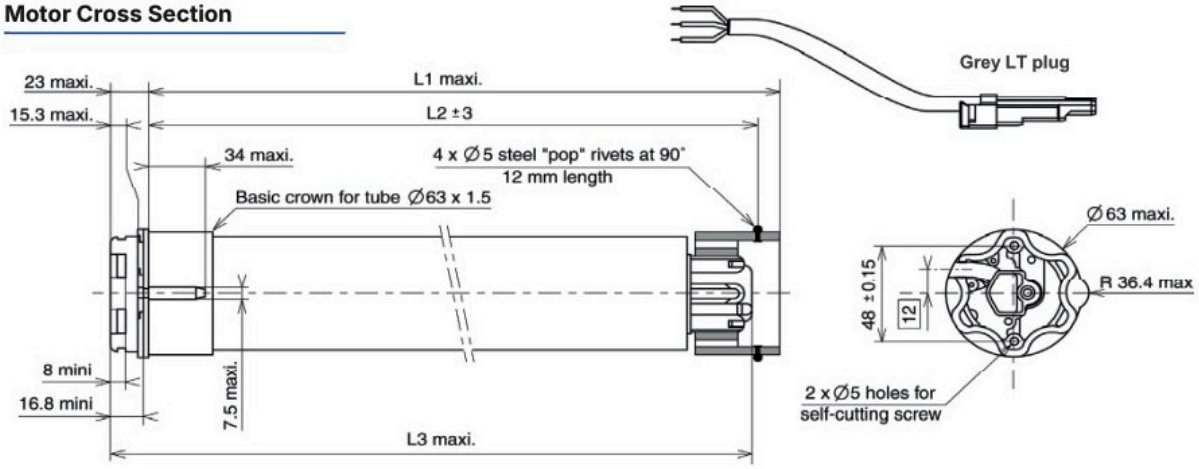


## Motor Control Details

Reversal of the direction : by pushing the stop button of the transmitter during 5" during the factory mode

Get control : Push the UP and DOWN button of the control in order to get control of the motor after the first power on during the factory mode

Reset of the memory : 1- double cut-off with making alive from 5" to 10".
2- push briefly the programming button of a new transmitter until the motor moves UP and DOWN briefly

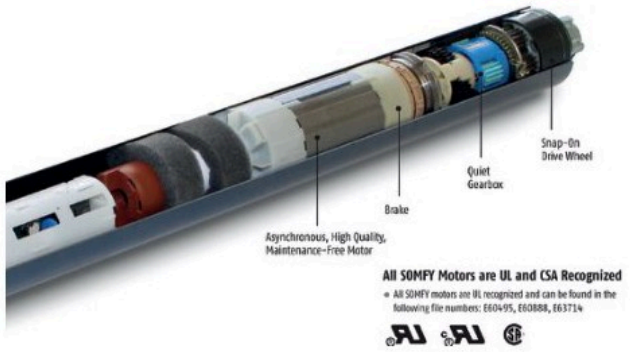


| | |
|---|---|
| Type of head | Star Head |
| Nominal voltage | 230 V 50 Hz |
| Power supply tolerances | 207 - 253 V AC |
| Thermal time | 4 minutes |
| Number of wires of the cable | 3 |
| Wire section | 0,75 mm² |
| Type of limit switch unit | Electronic |
| Capacity of the LSU | 200 turns |
| Repeatability | < ± 3° |
| System of protection | IP 44 |
| Interface drawings | Wheel interface LT60 206801-Crown interface LT60, LT60ADF, FTS60 & LT60CSI 206802-Interface drawing star head LT60 206803-Interface drawing LT50&60 buttons 206817. |
| Radio frequency | 433,42 MHz |
| Coding | Rolling code 16million of possibilities |
| Capacity of memory | 12 different transmitters plus 3 wireless sensors |
| Antenna | Integrated |
| Range | 20 m with 2 reinforced concrete walls to be passed through |
| R&TTE (Radio Equipement and Telecommunications Terminal Equipement Directive) | Dir 1999/5/CE |
| Safety Security | EN 60335 - 2 - 97 |
| Electromagnetic compatibility | EN 301489 - 3 |
| Radio frequency | EN 300 - 220 - 3 |
| | |
| Application | |
| Principle | |
| Basic crown for tube Ø | 63 x 1,5 mm |
| Temperature working range | Normal use: -10°C to +40°C Exceptional use (20% of the life time not simultaneous): -20°C to +70°C |
| Noise level | According to SOMFY measures (for information only). Worse value: in load up direction during 10 seconds. |

## PANELS IN OPEN POSITION

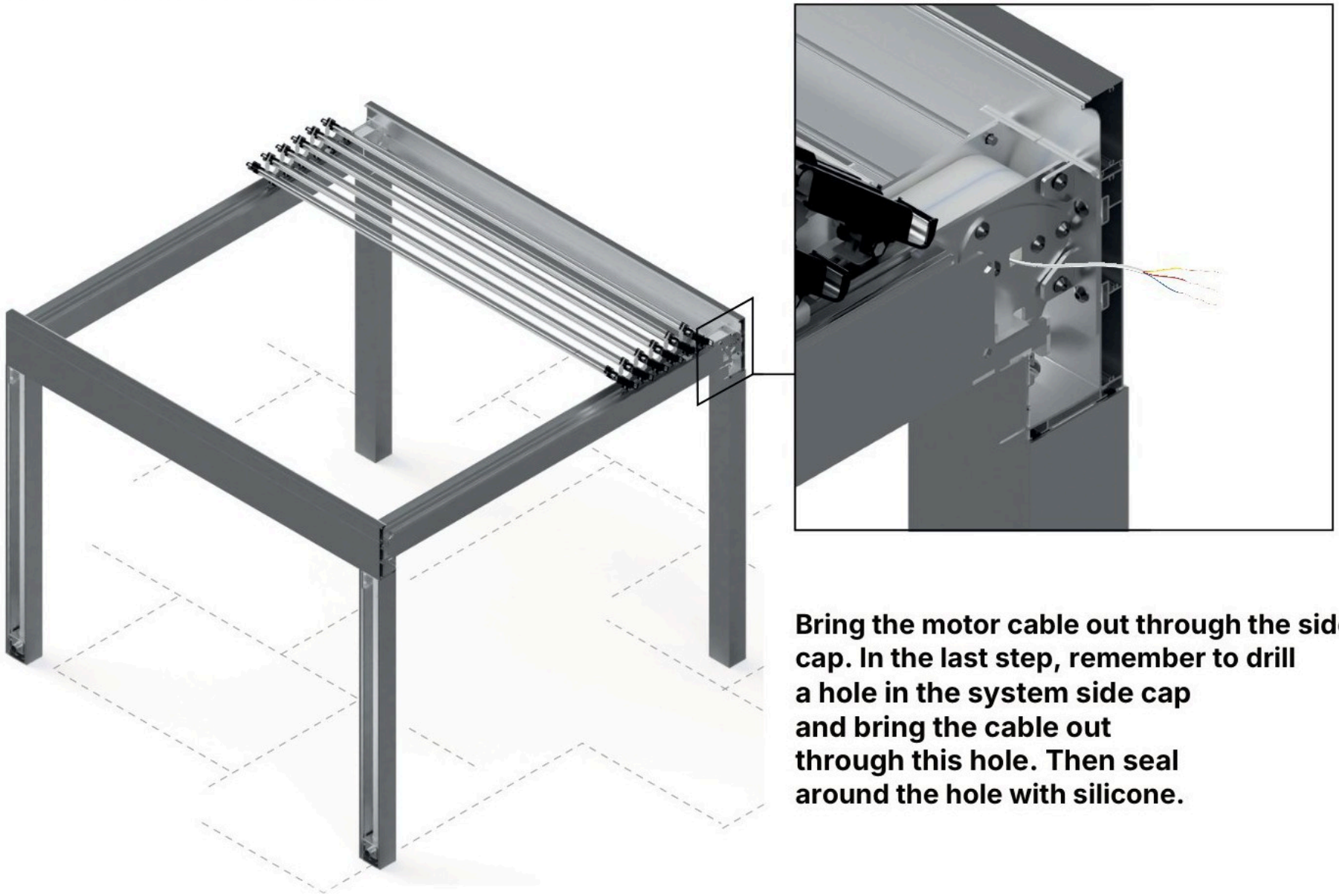



**Bring the motor cable out through the side cap. In the last step, remember to drill a hole in the system side cap and bring the cable out through this hole. Then seal around the hole with silicone.**

* Connect your supply cable to the connector coming from the tube motor, wired colored as blue / brown / green-yellow

* Always use insulated cable: if the cable is damaged, the insulation keeps the copper safe.

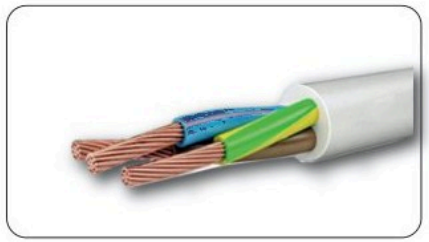

Min. cable cross section
3 x 1.5 mm² (14 AWG)
insulated outdoor cable.

| | | |
|---|---|---|
| Brown | | Live |
| Blue | | Neutral |
| Green-Yellow | | Earth |

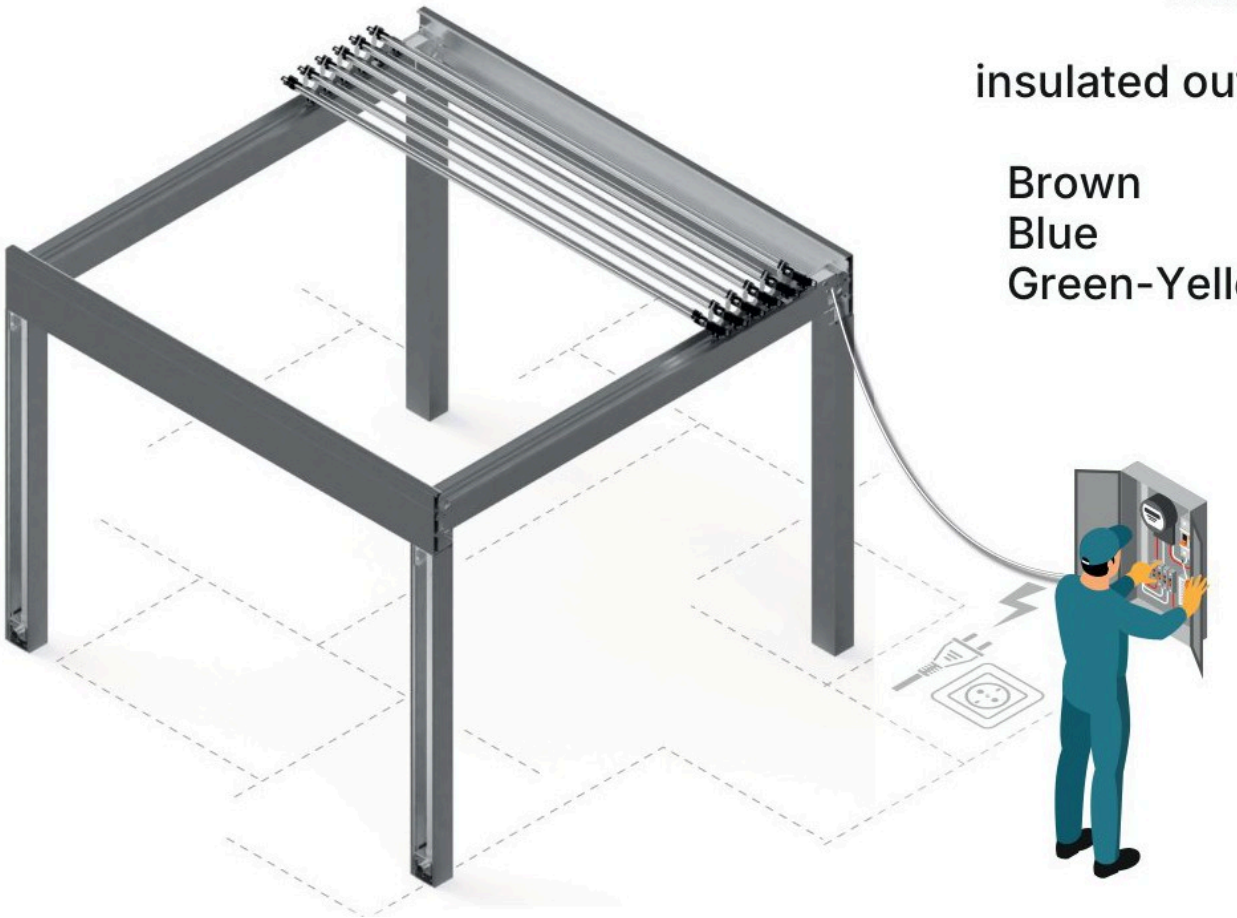

## Programming Mode

Motors ship without limit settings or remote IDs. Steps 1 to 7 must be completed for the roof to program and run correctly. Power ONLY the motor being programmed. Disconnect power from all other motors while programming.

## STEP 1: CONNECT POWER

Connect power: with the motor installed, connect power to the motor (voltage as on the motor label).



## STEP 2: START PROGRAMMING

Press both ^ and v at the same time until the roof jogs.
In programming mode, the roof will move only when the ^ or v is held



## STEP 3: CHECK FOR DIRECTIONS

Press ^ or v When pressing v product should go down or out. To change direction press and hold my until the shade jogs. Check direction. A jog is a brief up-and-down motion.

## STEP 4: LIMIT SETTINGS



This sets the limits. (Note: in this step the Up button opens and the Down button closes. If you have a sun, rain or wind sensor, that step please read the step 6 first) Open the pergola with holding ^ button and when it comese nearly opening position press my to stop pergola and make sensitivity setting with short presses of the Up and Down buttons. When it reaches the exact position of opening : *JUST PUSH* the v and my button at same time than pergola start to close. (Opening limit is set.)



When pergola comes nearly closing limit, push my button to stop pergola and make sensitivity with short presses of the Up and Down buttons. At the exact closing point, JUST push the ^ and my buttons at same time. And it start to open. (Closing limit is done)
**Opening and closing limits are now set.**

## STEP 5 CONFIRM LIMITS



Press and hold my my button and program button on the back until the roof jogs to confirm the limits.
A jog is a brief up and down motion.

## STEP 6: SET USER MODE



Press and hold the programming button on the back of the remote until the roof jogs.
The roof is now in user mode.
In user mode, the roof runs with a brief press on ^ or v
Double-check the limits as a precaution.

## STEP 7: FAVORITE POSITION

In user mode, move the roof to your favorite position, then press and hold the my until motor response you..

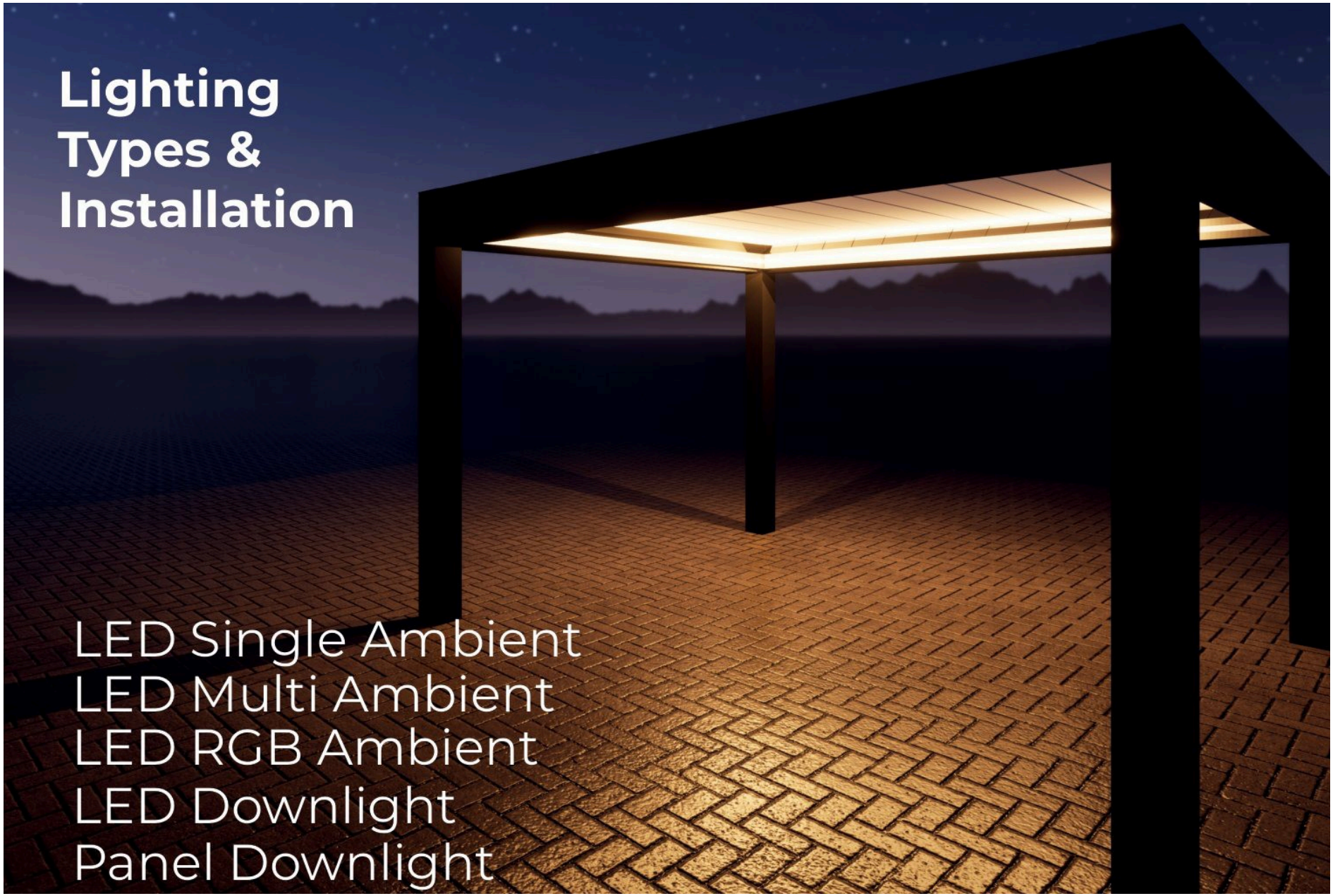
Lighting
Types &
Installation
LED Single Ambient
LED Multi Ambient
LED RGB Ambient
LED Downlight
Panel Downlight

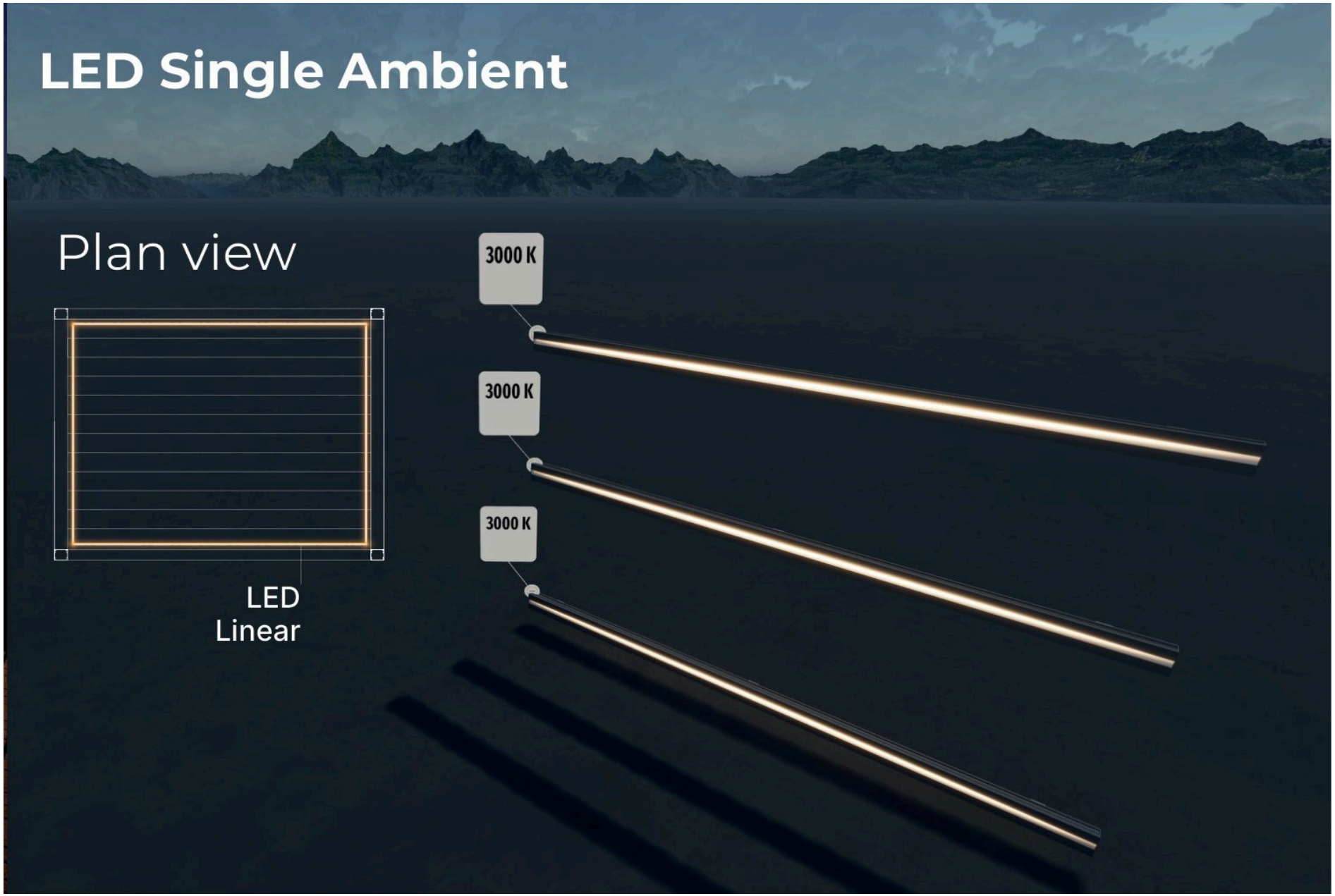
LED Single Ambient
Plan view
LED
Linear
3000 K
3000 K
3000 K

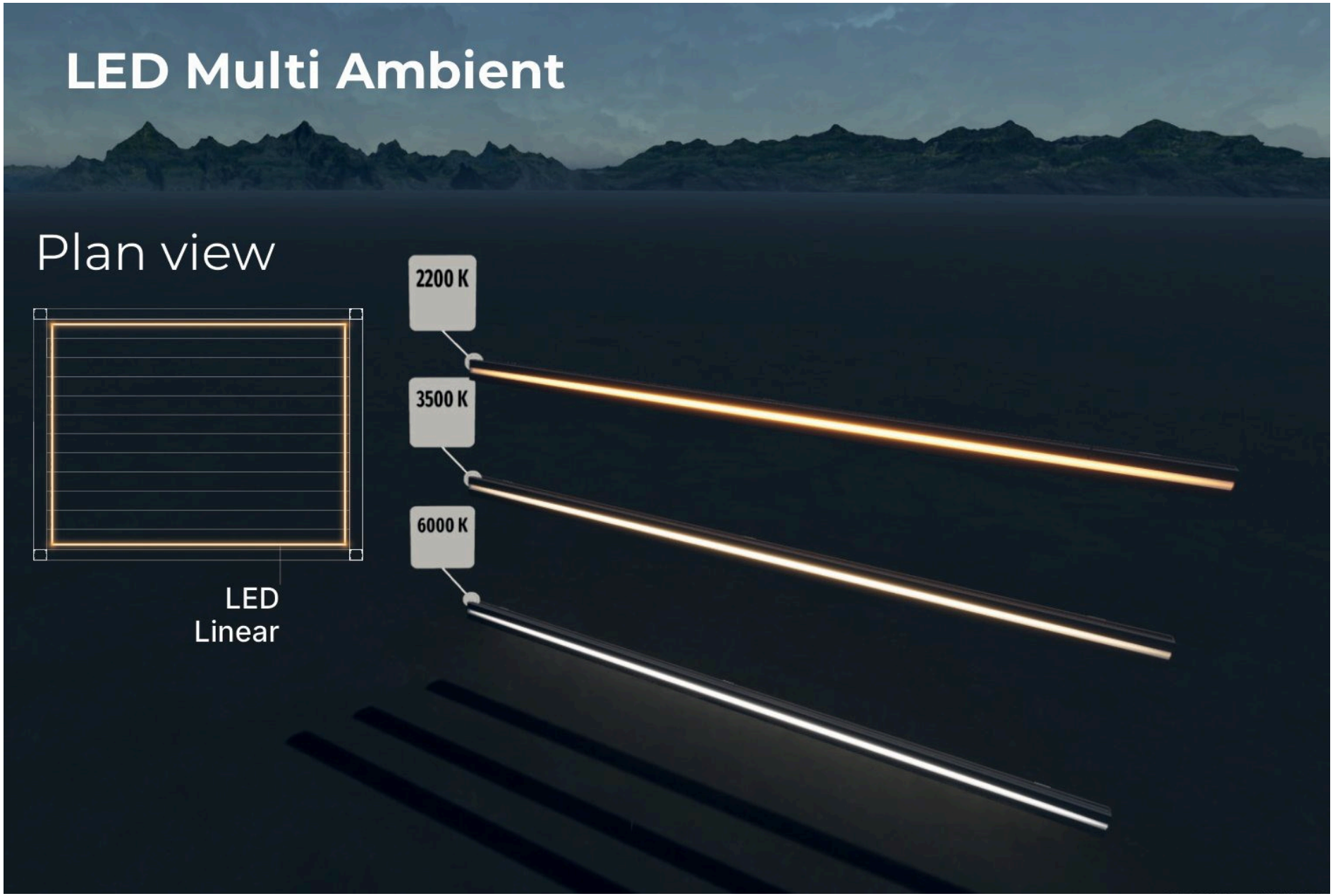
LED Multi Ambient
Plan view
2200 K
3500 K
6000 K
LED
Linear

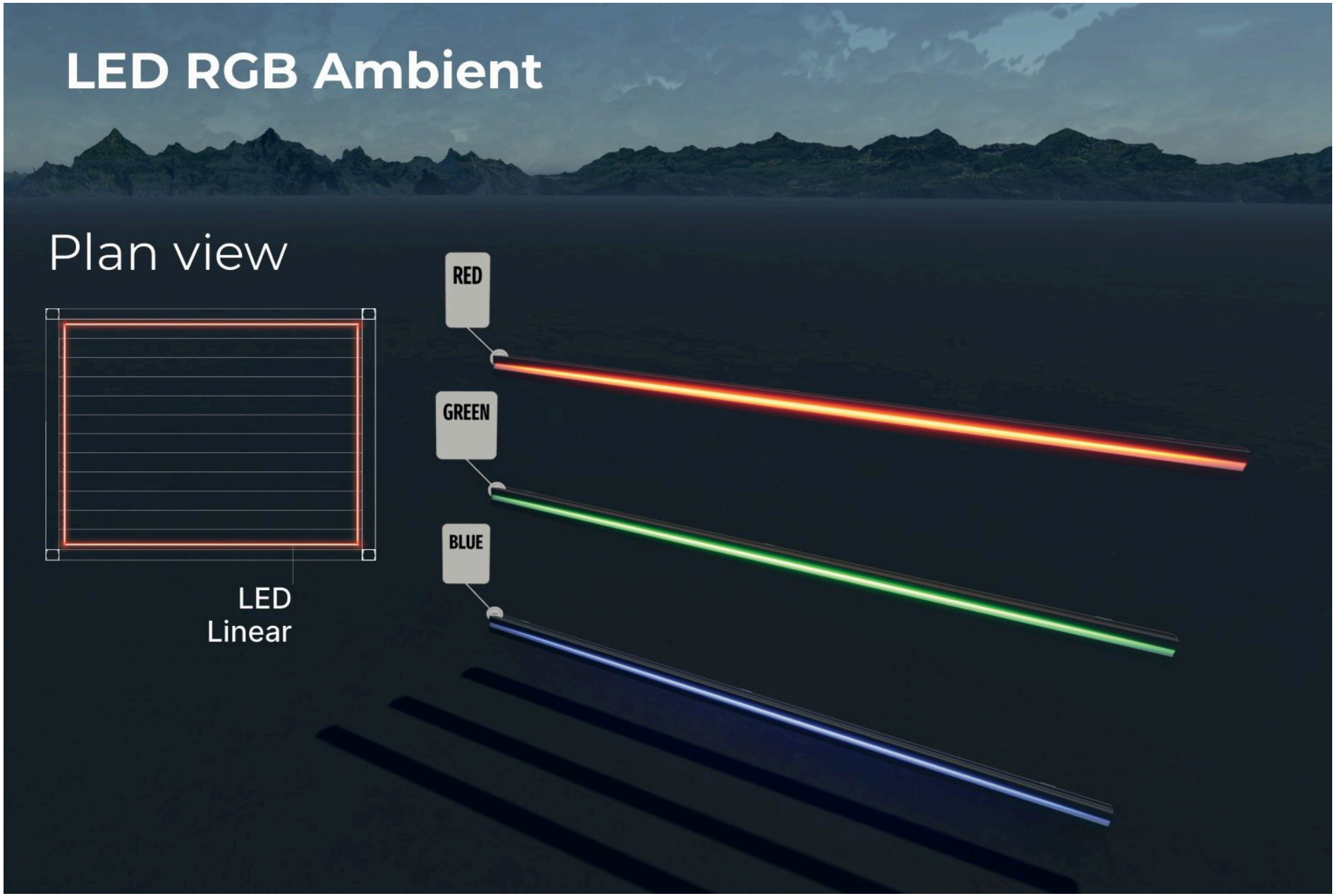
LED RGB Ambient
Plan view
LED
Linear
RED
GREEN
BLUE

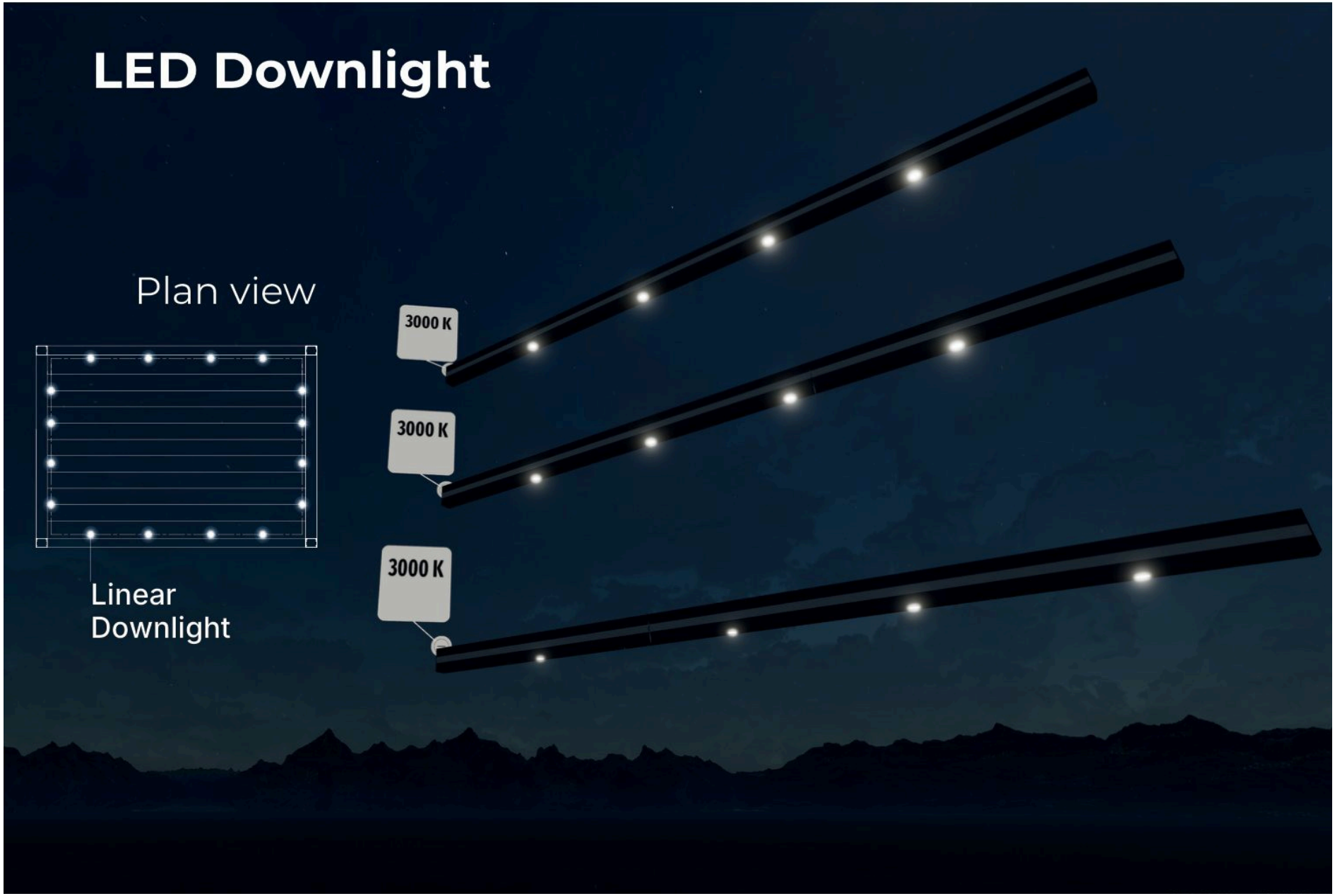
LED Downlight
Plan view
Linear Downlight
3000 K
3000 K
3000 K

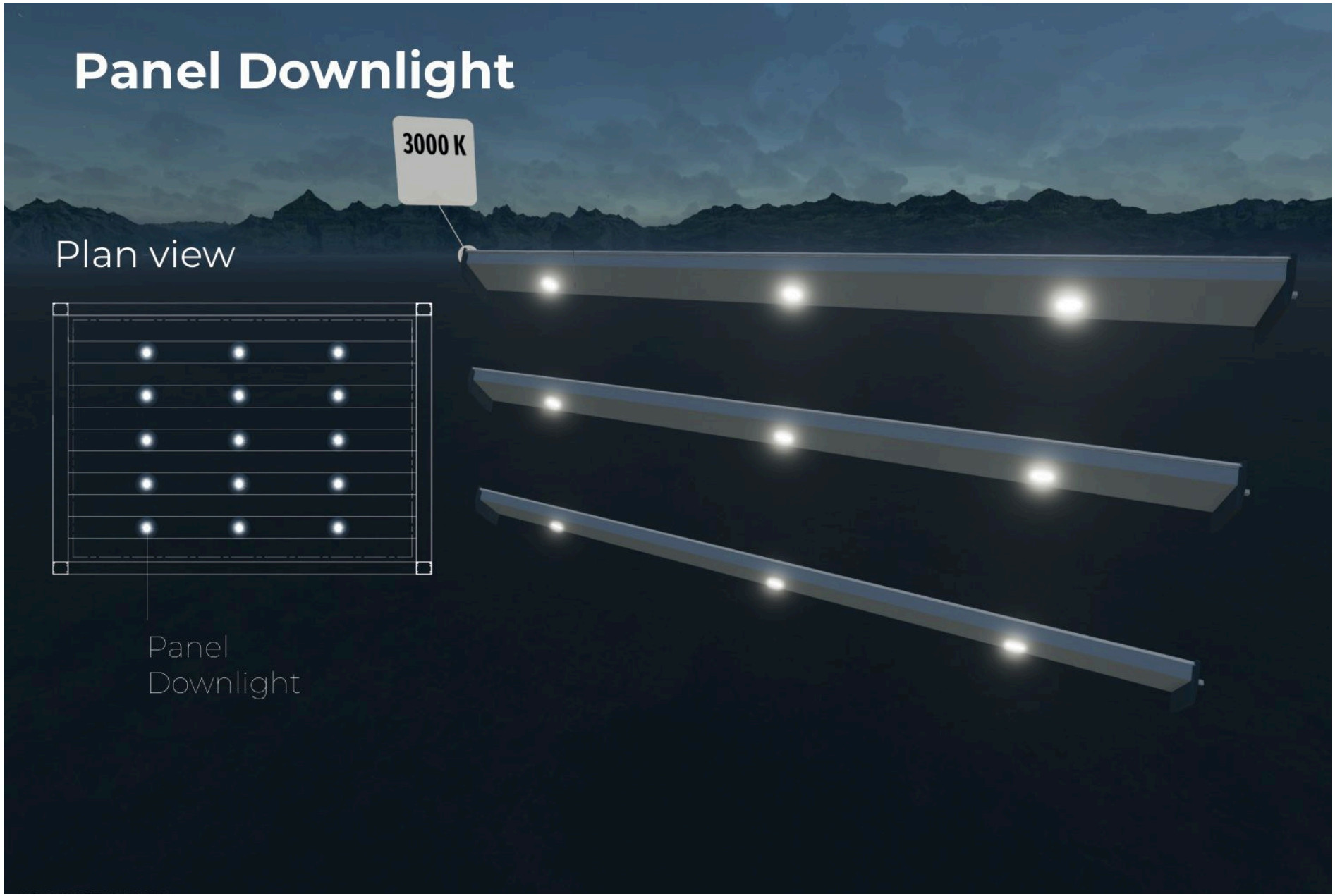
Panel Downlight
3000 K
Plan view
Panel
Downlight

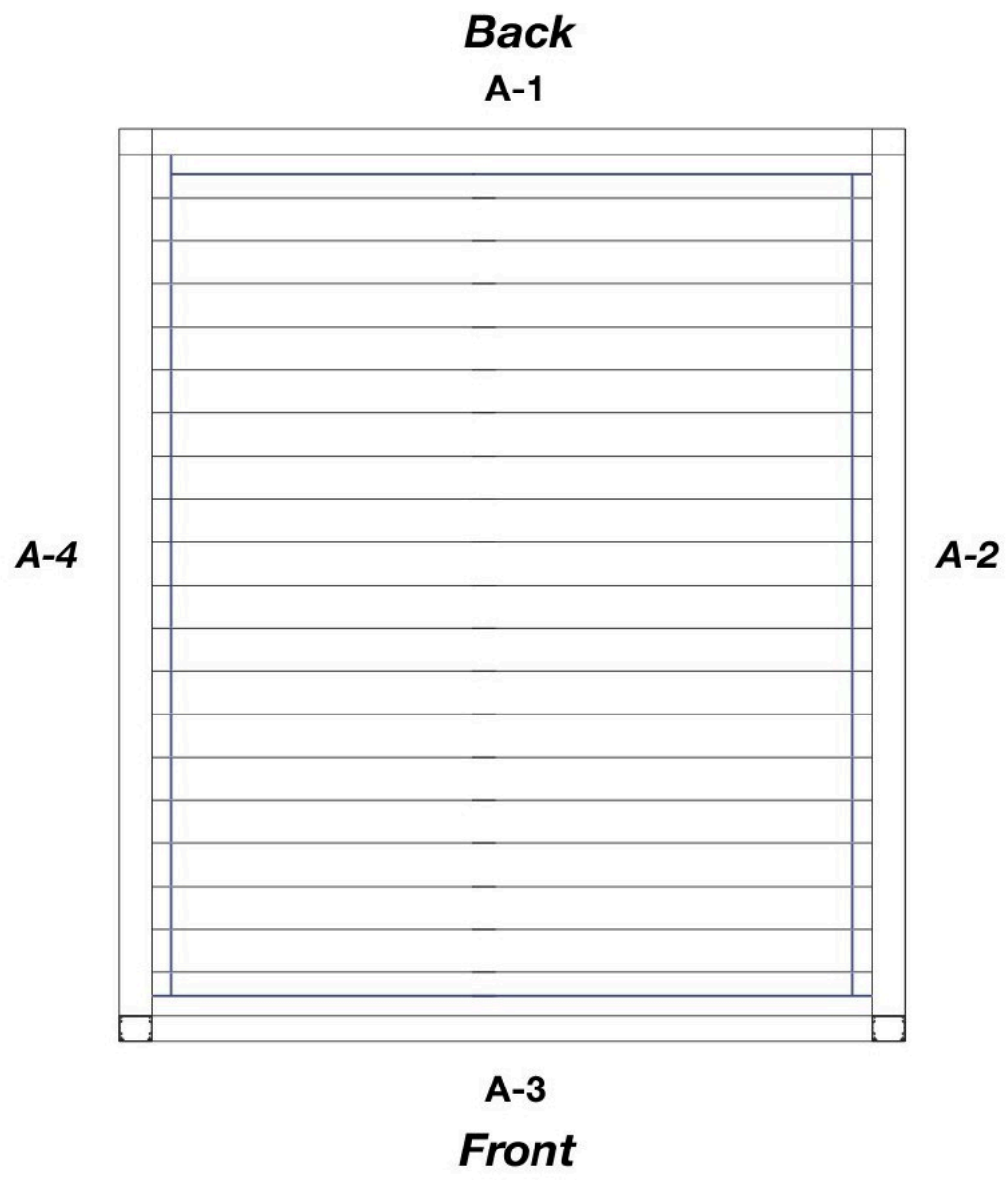


## Project Lighting Plan

The plan on the left is an example for a system with 4 pillars. LED profiles are numbered A-1, A-2, A-3, A-4 clockwise.

Fit the small holders first. Use 3.9 x 13 self-drilling screws and leave a 13 mm gap at the bottom. Fit them on the inside face of the gutter and rail profiles every 1 m as shown below.

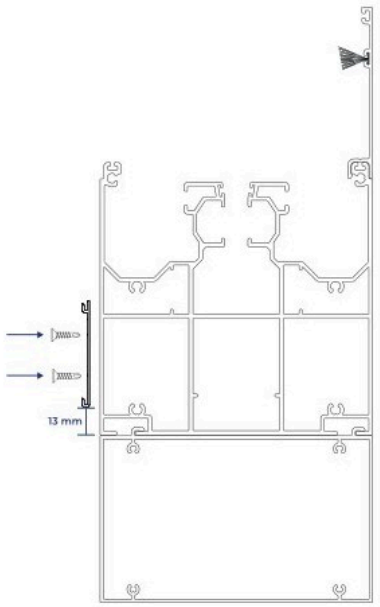
13 mm

## Rail


3.9x13 screw

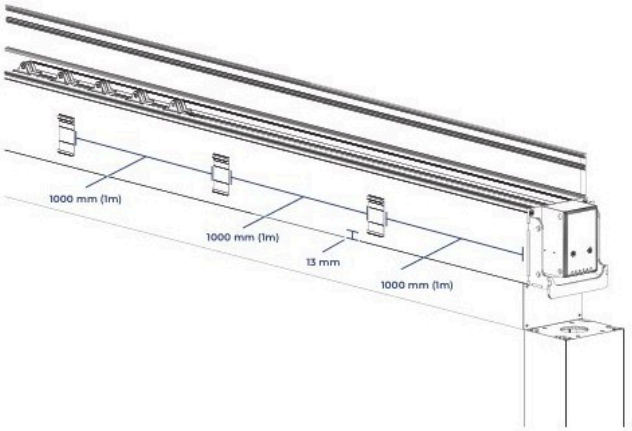
1000 mm (1m)
1000 mm (1m)
13 mm
1000 mm (1m)

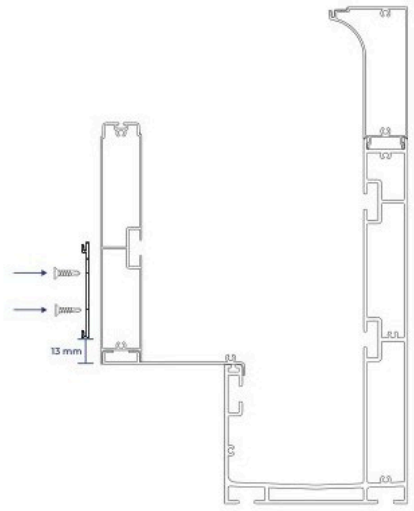
13 mm

## Gutter

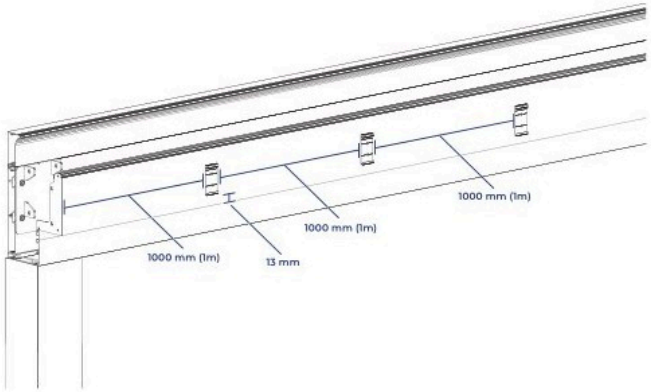
1000 mm (1m)
1000 mm (1m)
13 mm
1000 mm (1m)


3.9x13 screw

When the holders are in, clip the LED profiles on as shown in the plan. Check each position against the plan twice.

## Project Lighting Plan

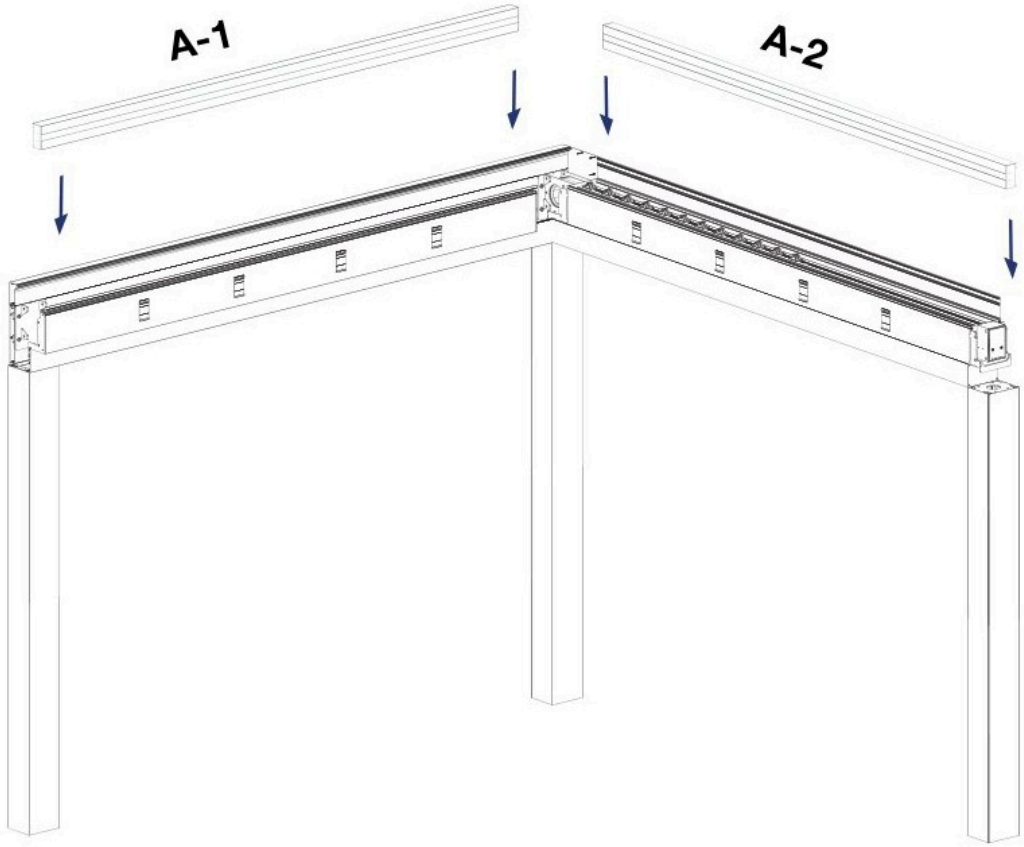


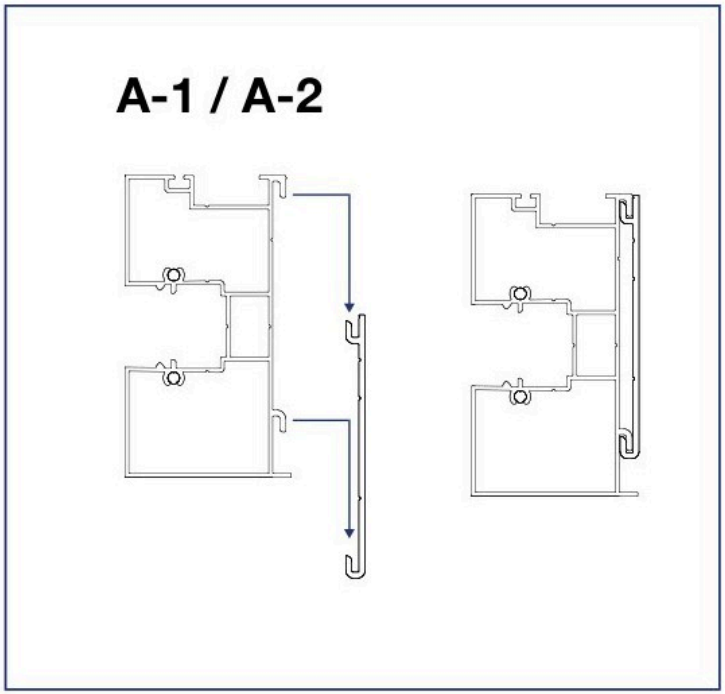

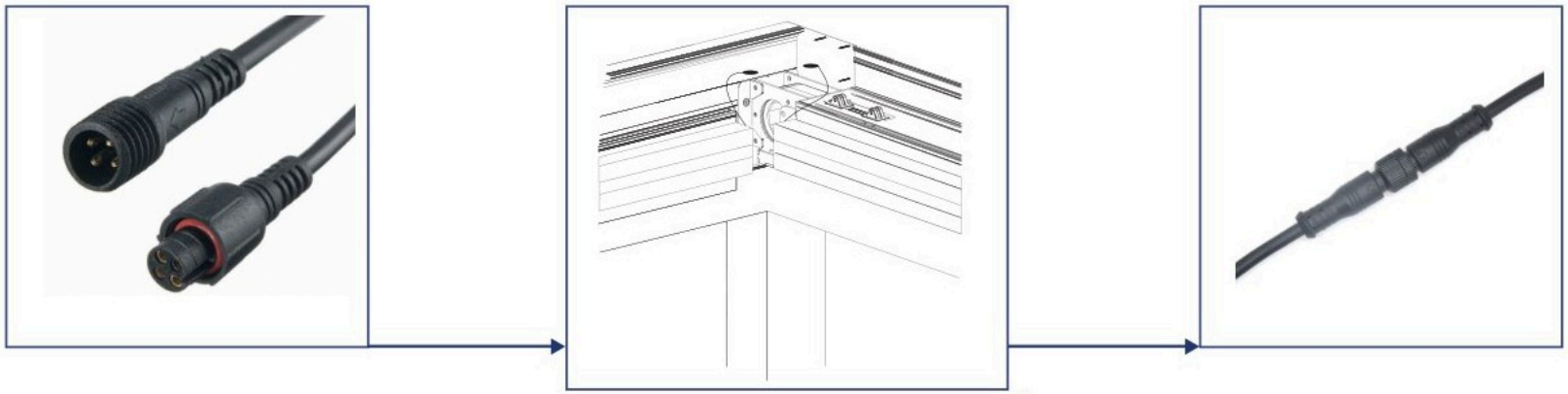

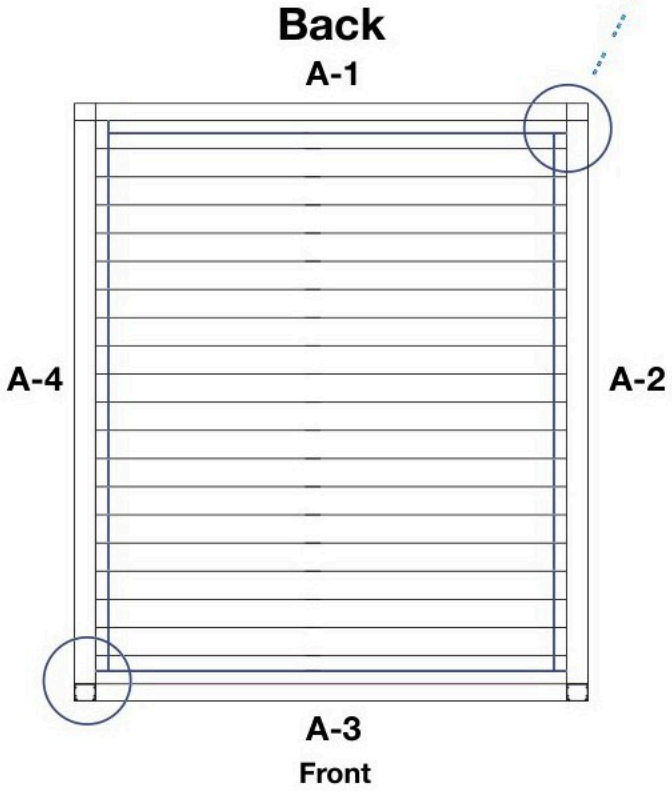





Connect the LED profiles electrically at the corners with the L-shaped socket cables.

# LED Linear Ambient + Downlight (Spotlight) Connection Plan

## 2. LED Ambiance



When your pergola system arrives, you will find 2 insulated cables:
* Black 2x0.75 / 3x0.75 / 4x0.75 insulated cable, depending on your lighting system.
Both cable connections are shown below.

Rail

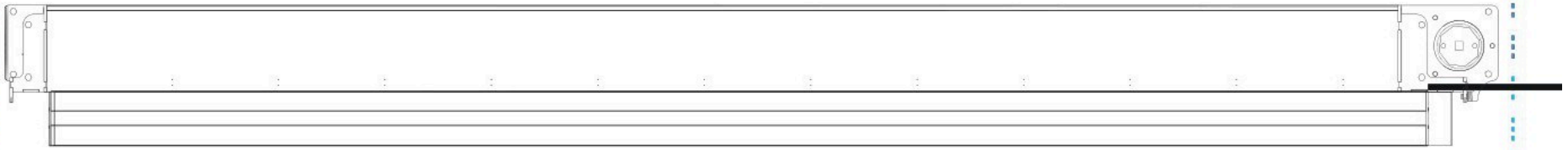

# LED Linear Ambient Connection Plan

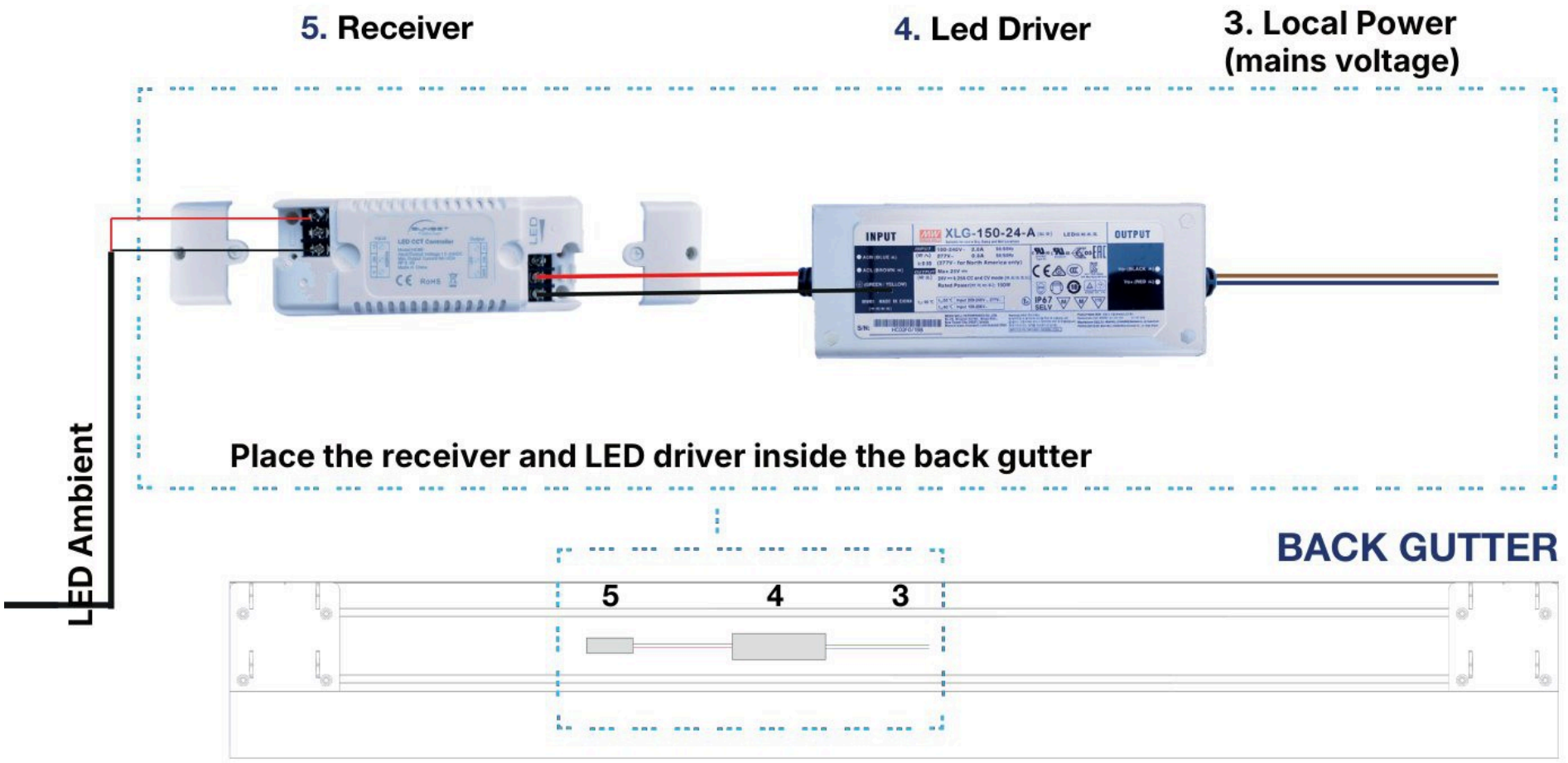

# LED Linear Ambient + Downlight (Spotlight) Connection Plan

## 2. LED Ambiance



**When your pergola system arrives, you will find 2 insulated cables:**
*** Black 2x0.75 / 3x0.75 / 4x0.75 insulated cable, depending on your lighting system.**
**Both cable connections are shown below.**

**Rail**

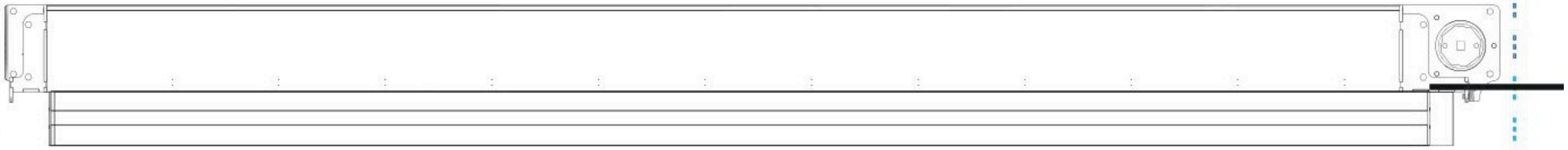

# LED RGB Ambient Connection Plan

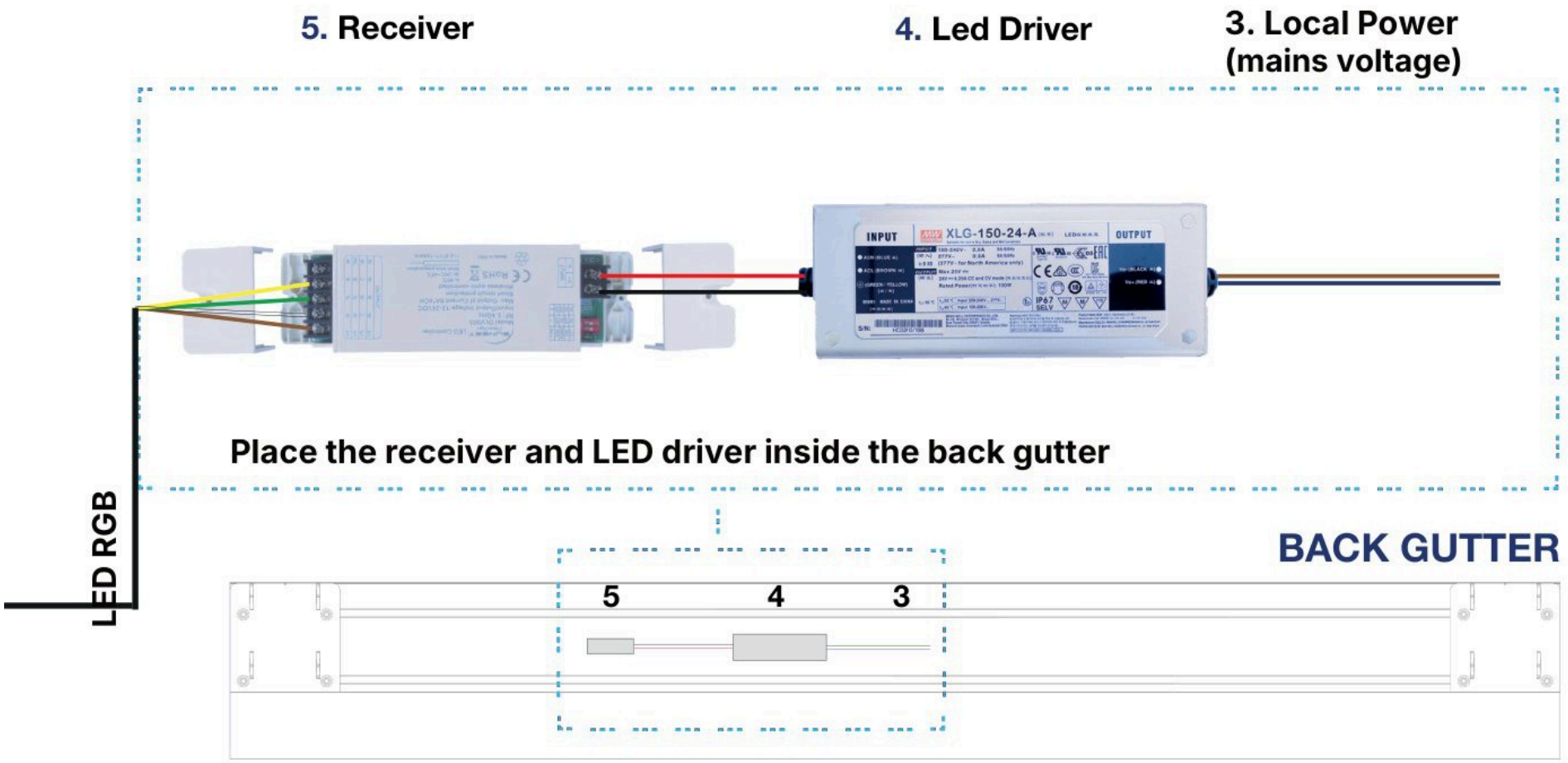

# LED lighting: power and connections

## For LED lighting power and connections:

Haven Pro lighting is designed and tested by our research and development team for reliable outdoor use.

---

**There are 6 LED system types:**

**1 Single system, single color**

2 Single system, multi color
3 Single system, RGB color
4 Multi system, single color
5 Multi system, multi color
6 Multi system, RGB color

---

* For the AC supply, use 3 x 1.5 $mm^2$ insulated cable for your safety.

* The black 2x0.75 / 3x0.75 / 4x0.75 insulated cable belongs to the LEDs.

# Remote Control Types

## Single Color




## Multi Color

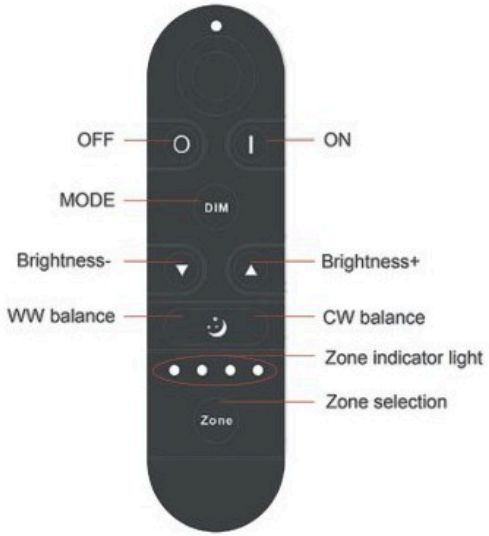


## RGB Color



# Receiver Types

## Single / Multi Color




## RGB Color

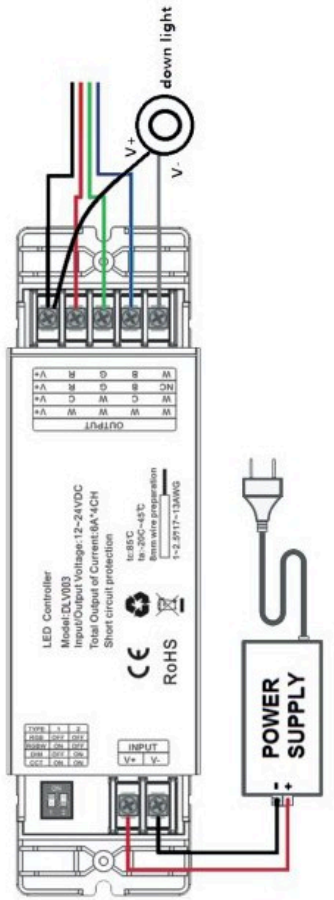

# Zone pairing for the MULTI color remote




## SET

**Step 1:** Turn off the local electricity.
**Step 2: Press** and hold CCT button.
**Step 3:** While pressing CCT button turn on the electricity.
**Step 4:** Press ON button 3 times.

## CLEAR

**Step 1:** Turn off the local electricity.
**Step 2: Press** and hold CCT button.
**Step 3:** While pressing CCT button turn on the electricity.
**Step 4:** Press DOWN ▼ button 3 times.

# Zone pairing for the RGB color remote




## SET

Step 1: Connect the load to the receiver and power it on.
(If the receiver was paired before, clear the code first.)

Step 2: Select the zone (press the ZONE key; its indicator lights up).

**Step 3:** Press and hold ON on the remote control for 5 seconds, the remote indicator flashes quickly: it is now sending the pairing code.
(It exits pairing automatically after 60 seconds, or press any key to exit.)

Step 4: The load light flashes 3 times and returns to its initial state.
(Pairing is complete.)

# Zone pairing for the RGB color remote




## CLEAR

Step 1: Connect the load to the receiver and power it on.
(Clearing must be done within
1 minute of powering on the receiver.
If that time passes, power it on again.)

Step 2: Press and hold 'OFF' on the remote for 5 seconds.
The remote indicator flashes quickly:
it is now sending the clearing code.
You do not need to select a zone when clearing.
(It exits automatically after
60 seconds, or press any key to exit. If the original remote is lost,
a new remote can be used to clear the code.)

Step 3: The load light flashes 3 times and returns to its initial state.
(Clearing is complete.)

Step 5.1

In this step you fit the HP 71 rail bottom box profile and the HP 73 rail side cover. Clip them on as shown and fix with 3.9 x 13 screws.

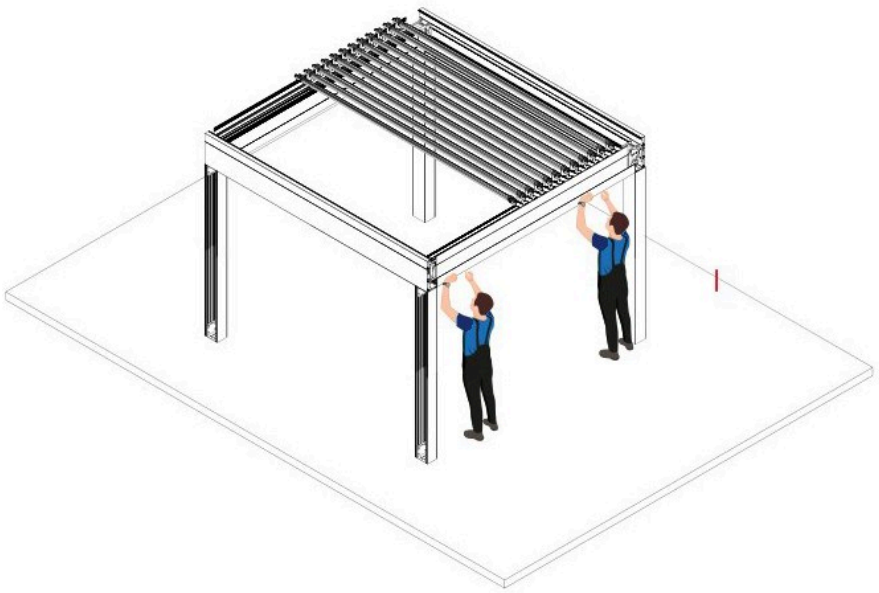

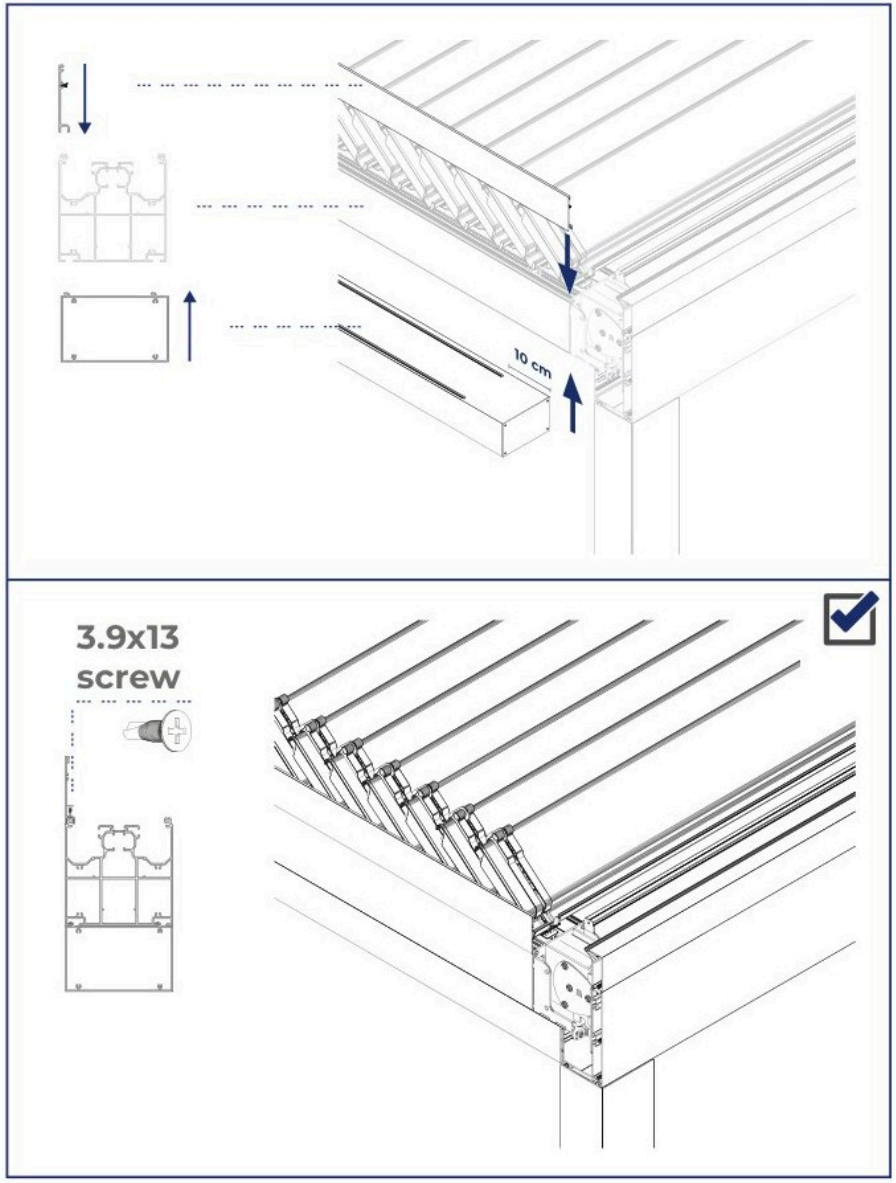

Step 5.2

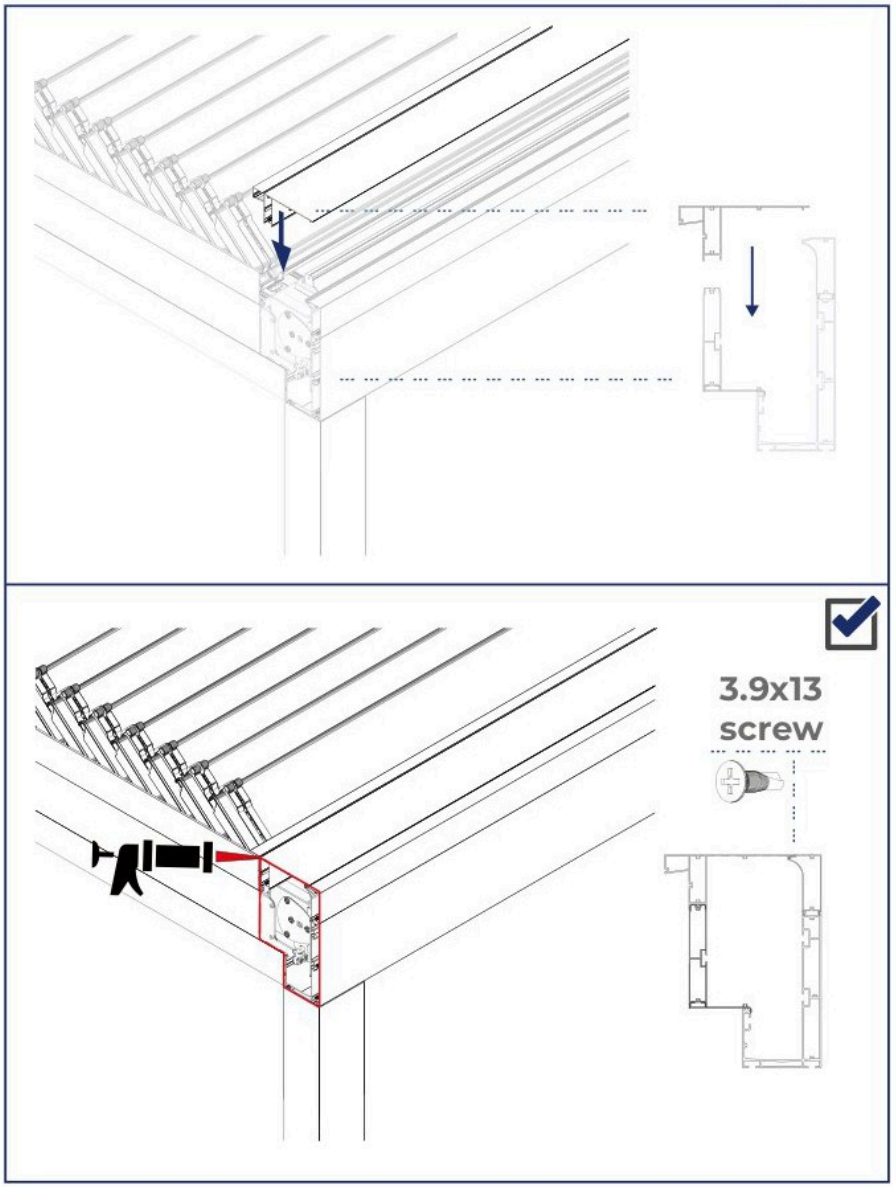


In this step you fit the
HP 72 gutter top cover on the back gutter.
Clip it on as shown
and fix with 3.9 x 13 screws.



Step 5.3

In this step you fit the HP 12 side caps. The small ones go on the front, the big ones on the back. Fix with 4.2 x 25 Torx screws using a drill.

**! Remember to drill the hole in the back side cap for the motor cable, and seal around it with silicone.**

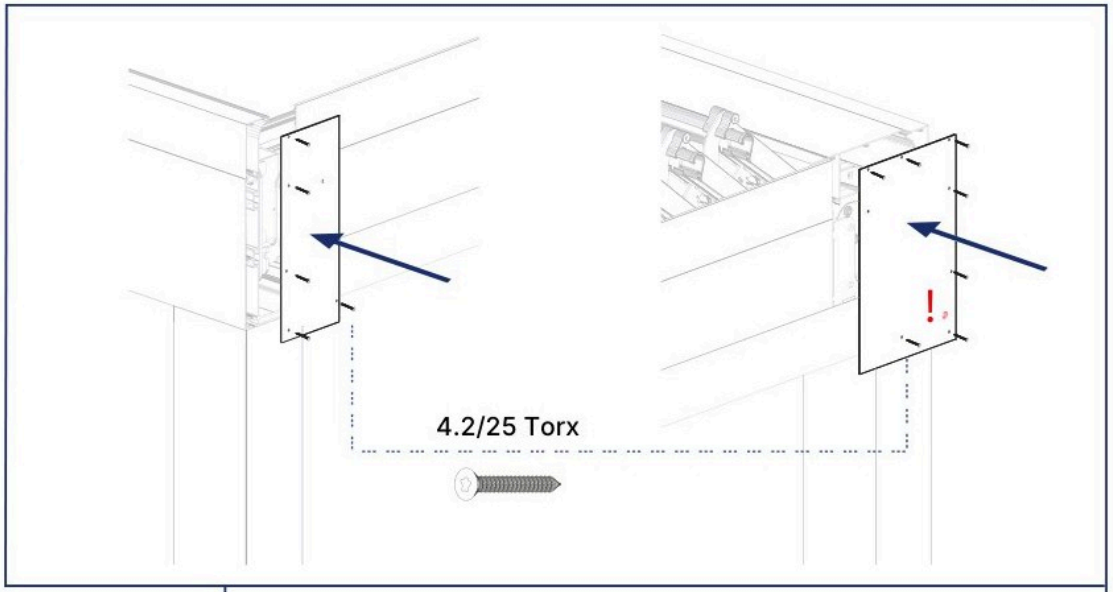


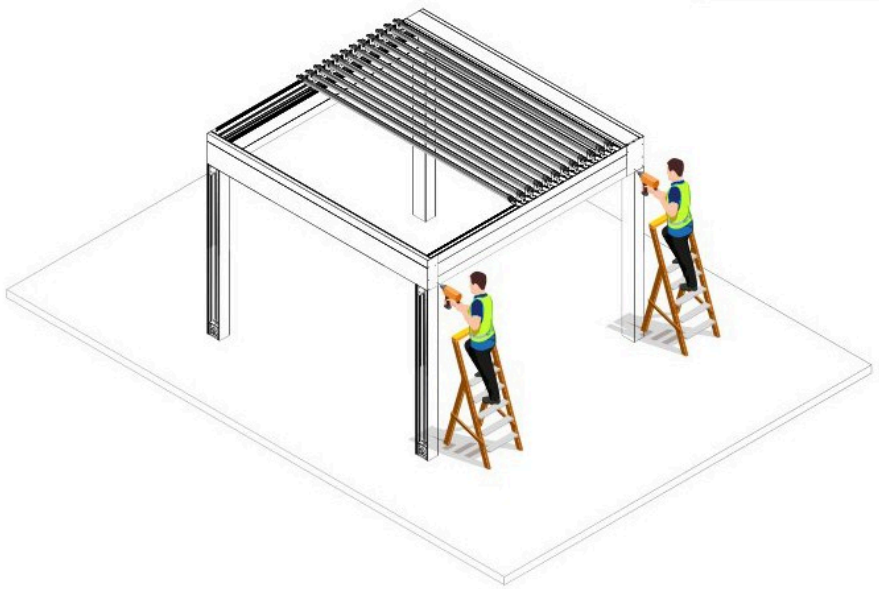

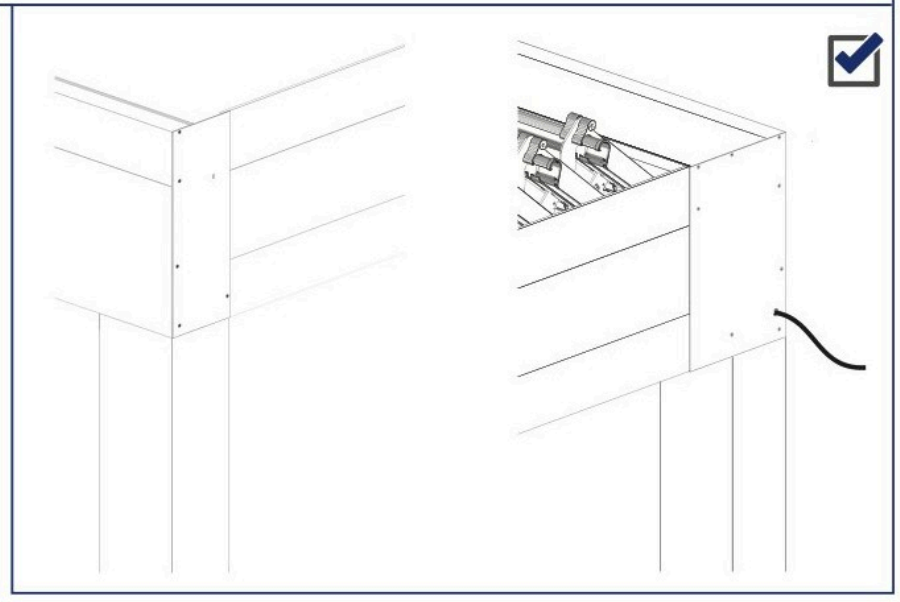

## Step 5.4

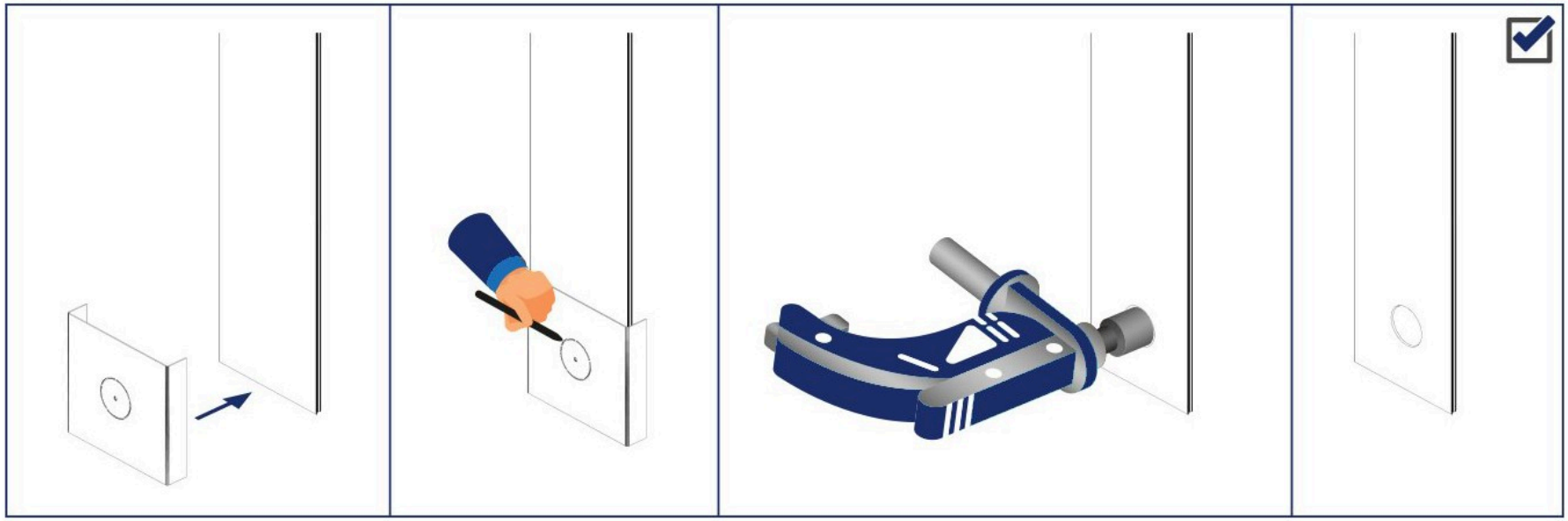

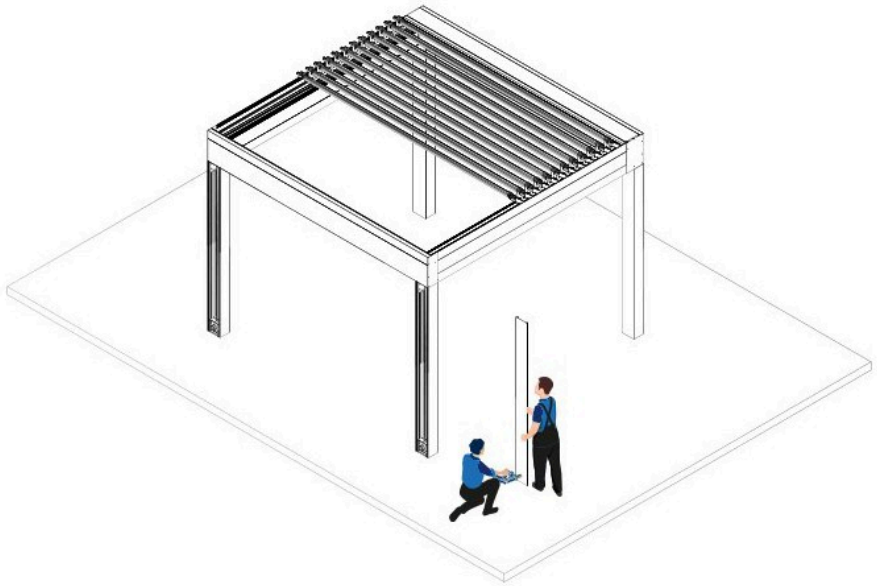

In this step you fit the HP 13 pillar covers. One cover ships per pillar. Clip each cover onto the outside of its pillar as shown. No extra screws or connectors are needed. Repeat for every pillar.

## Step 5.5

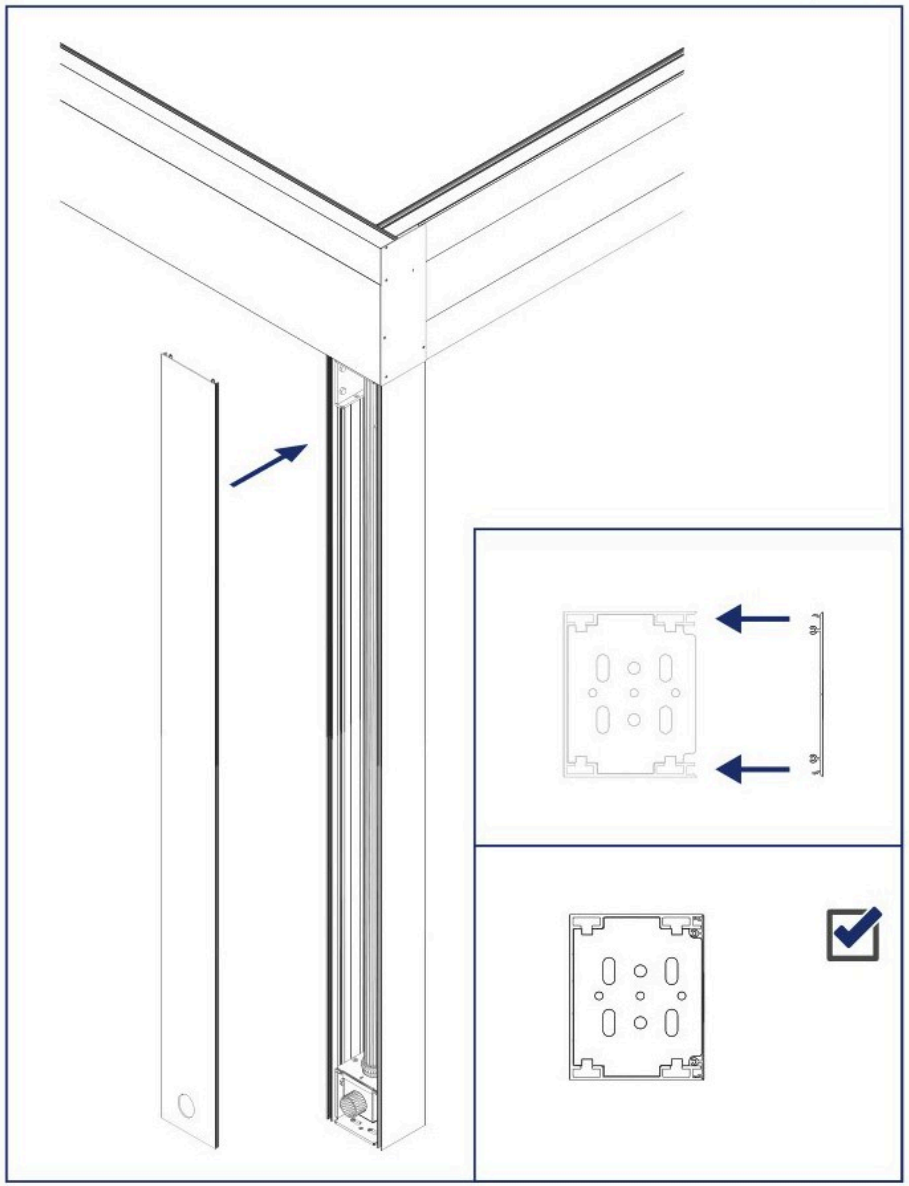

In this step you fit the HP 13 pillar covers. One cover ships per pillar. Clip each cover onto the outside of its pillar as shown. No extra screws or connectors are needed. Repeat for every pillar.

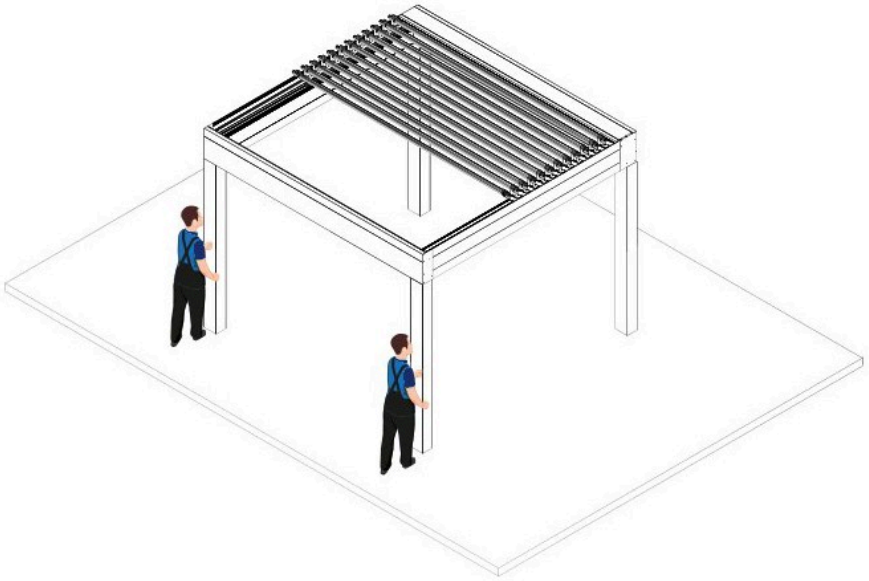

Step 5.6

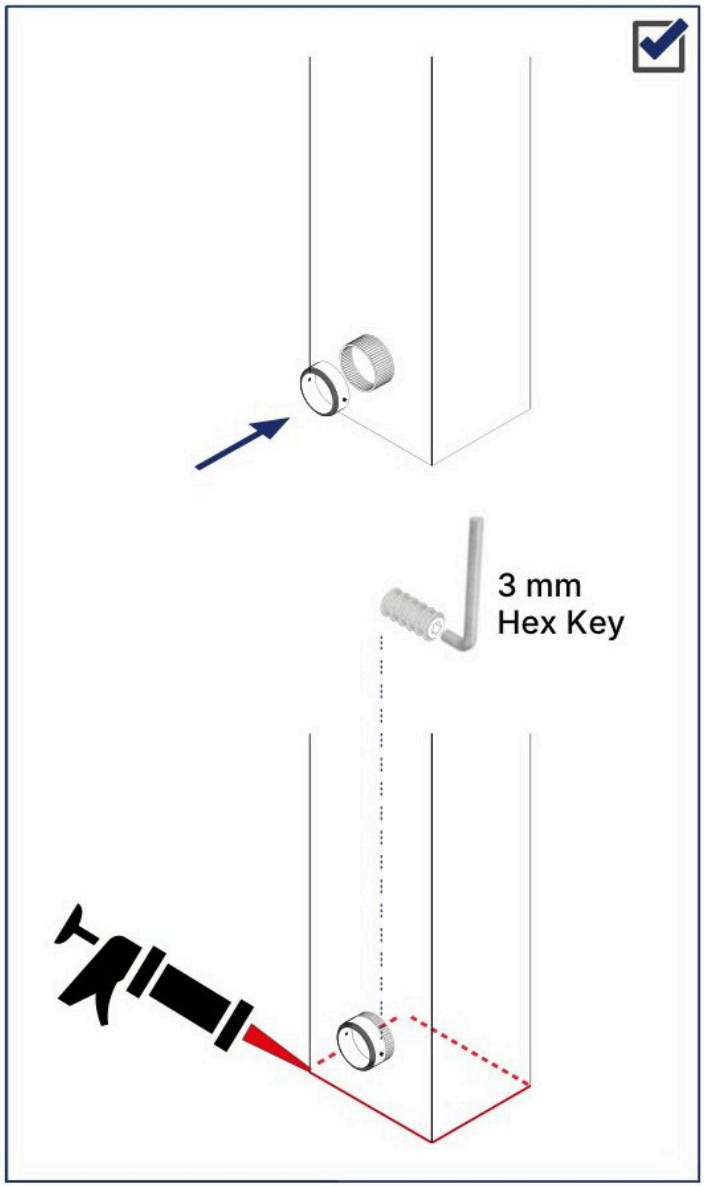


In this step you fit the outer ring cap HP 17 of the drainage system. Fit it as shown and secure it with a 3 mm hex key. Then seal each pillar base.

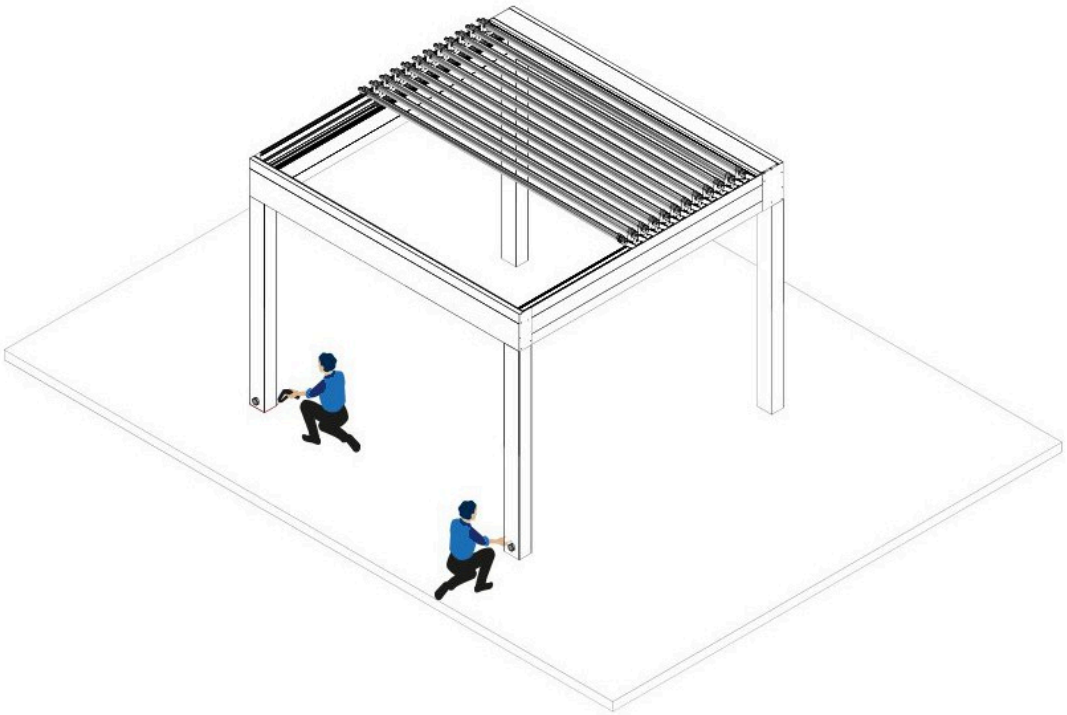

## Your HAVEN PRO is ready to use!

Haven Pro is the retractable bioclimatic pergola of the Pergolast Haven Collection.
A built-in motor and spring mechanism moves the aluminum roof panels back and forth, so the roof can be open, closed or half open.
The panel angle lets you control shade, airflow, heat and light, all at the same time.
When you want open sky, Haven Pro opens fully.
Optional insulated profiles add heat and sound insulation to the roof panels.



## Advantages

Closed, half-open or open, Haven Pro adapts to the way you live outdoors.
The aluminum roof panels open to angles between 0 and 55 degrees for full freedom of use.
Haven Pro stands on its own posts, or can be mounted to a wall or under a ceiling with special support arms.
Several units can be joined side by side in any direction to cover the whole area you need.

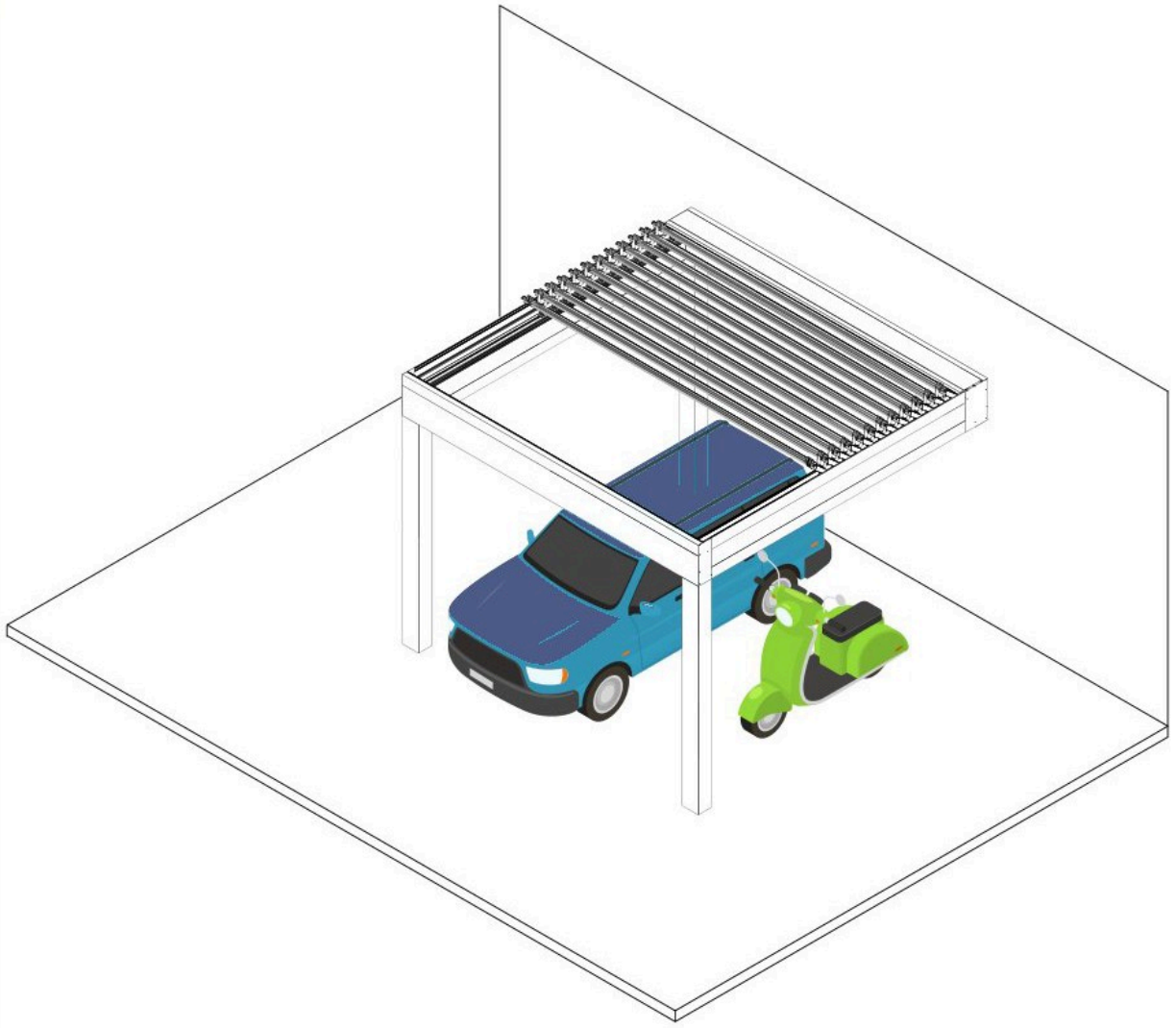

PERGOLAST
By GLASS GROUP



# Need help? We're one call away.

### A new pergola or a quote

Pergolast sales · (646) 495-9911 · sales@pergolast.com

### Installation, repairs, parts or service

Pergola Installer · (908) 772-8189 · service@pergolainstaller.com

### Register your warranty

Your contractor emails service@pergolainstaller.com within 30 days of finishing: order number, address, install date and photos of the finished system, anchors and wiring.

### Keep this manual

Store it with your order confirmation and warranty certificate.