

PERGOLAST · HAVEN COLLECTION · RETRACTABLE LOUVERED ROOF PERGOLA

Haven Pro

Open sky. On command.

Haven Pro is a retractable roof that does more than tilt. Press a button and the panels slide back and stack at 65°, opening up to three-quarters of the sky. Press it again and the roof closes, sealed edge to edge, with rain carried away through concealed gutters.

How it works

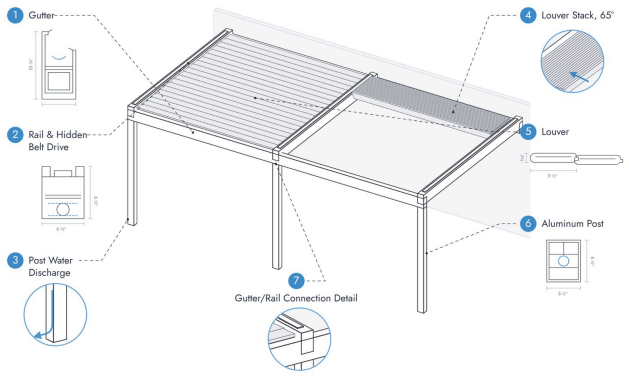

The roof panels run on rails and stack at 65°. Drainage runs inside the posts

0% — **Closed**
Sealed edge to edge. Rain runs into the rail gutters.

50% — **Half open**
Shade over the table, open sky beyond.

75% — **Open sky**
Panels stack at 65°. Up to ¾ of the roof opens.

¾
Of the roof opens to the sky

65°
Panel stack angle

±15 psf
ASTM E330 tested

10 yrs
Warranty on the frame

Made for

Restaurants
Roll the roof back on clear nights, close it when it rains.

Rooftops and amenity spaces
Host events under open sky.

Homeowners
Real open air, not just angled slats.



Panels open to the sky

What you get

Not tilted. Truly open.

A louvered roof only angles its slats. Haven Pro moves the panels out of the way, so up to 75% of the roof opens straight to the sky.

Sealed shut. Stays dry.

Closed, the panels meet edge to edge. Rain runs into gutters hidden in the rails, then down through the posts.

One button. Quiet drive.

A Somfy motor moves the roof with a hidden belt drive inside the rails, so you don't see or hear the mechanics.

Tested to U.S. methods.

Structural testing to ASTM E330 (±15 psf design, ±22.5 psf proof) and water testing to AAMA 501.1.

Big spans. Fewer posts.

Made to measure up to about 850 sq ft (36′-11″ × 23′), big enough for a full restaurant patio.

Dust shield built in.

Brush seals run the full length of the rails, keeping dust, sand and leaves out so the roof keeps gliding smoothly.

Any color. Any evening.

Choose from 12 finishes or any RAL color, and add dimmable LED ambient or downlights.

Close the sides too.

Pair it with Haven Shade, Haven Rise or Haven Glide for a space you can use in all four seasons.

Close the sides

Haven Shade	Haven Rise	Haven Glide	Haven Fold
Motorized zip screens	Motorized guillotine glass	Sliding glass doors	Bi-fold glass doors

GET YOUR QUOTE

Made to measure. Professionally installed.

Send a photo of your space and a rough size. We help you pick the setup and send a price.

(646) 495-9911

sales@pergolast.com

pergolast.com

Installation: service@pergolainstaller.com